KENYA RURAL ROADS AUTHORITY
NAIROBI REGION

TENDER FOR_

ROUTINE MAINTENANCE & SPOT IMPROVEMENT

OF NGUMBA ROAD 1
FY 2019/20

CONTRACT NO. KeRRA/015/NRB/011/39/11/2019-2020

22% –ROYSAMBU CONSTITUENCY

BID DOCUMENT:

INSTRUCTIONS TO BIDDERS
CONDITIONS OF CONTRACT
FORM OF BID
SPECIFICATIONS
BILL OF QUANTITIES
DRAWINGS
CATEGORY: C

NOVEMBER, 2019

Director General Kenya Rural Roads Authority P.O Box 48151 - 00100 **NAIROBI**	Deputy Director Nairobi Region P.O Box 5277-00506 **NAIROBI**

CONTENTS:

0.0 INVITATION TO TENDER 3

1. INSTRUCTIONS TO TENDERERS. 4

1.0 GENERAL 4

2.0 TENDER DOCUMENTS 4

3.0 PREPARATION OF TENDERS 5

4.0 SUBMISSION OF TENDERS 6

5. TENDER OPENING 6

SECTION 1 QUALIFICATION CRITERIA AND EVALUATION 7

OTHER SUPPLEMENTARY INFORMATION 9
SECTION 1 SCHEDULE 4; PROPOSED EQUIPMENT. 11
MEET THE REQUIREMENT AS PER THE STANDARD FORMS ATTACHED DECLARE/ FILL THE FRAUD & CORRUPTION 12
SECTION 1 SCHEDULE 5: WORK METHODOLOGY 13
6.0 TENDER EVALUATION 14
DETERMINATION OF RESPONSIVENESS 14
6.11 POST-QUALIFICATION OF TENDERER/DUE DILIGENCE 15

7 AWARD OF CONTRACT 15

8.0 CONDITIONS OF CONTRACT 16

PART I: GENERAL CONDITIONS OF CONTRACT 16
PART II: CONDITIONS OF PARTICULAR APPLICATION 16
1.1 DEFINITIONS 16
1.2 INTERPRETATION 16

4 THE CONTRACTOR 17

4.1. GENERAL OBLIGATIONS 17
4.2. PERFORMANCE SECURITY 19
9. TIME FOR COMPLETION 19
9.1 EXECUTION OF THE WORKS 19
9.2 PROGRAMME 19

10. VARIATIONS AND CLAIMS 20

10.2 PERMITTED VARIATIONS 20

11. CONTRACT PRICE AND PAYMENT 20

VALUATION OF THE WORKS 20
11.2. 21
11.3. INTERIM PAYMENTS 21

SPECFICATIONS, CONTRACT DRAWINGS 24

AND BILL OF QUANTITIES 24

BILL 01: PRELIMINARY AND GENERAL ITEMS 24
01-60- 001 CONTRACT SUPERVISION 24
01-60-004 QUALITY CONTROL TESTS 24
01-60-005 PUBLICITY SIGN BOARDS 24
BILL 04: SITE CLEARANCE 25
04-50-004 BUSH CLEARING (LIGHT) 25
BILL 05: EARTHWORKS 26
05-50-009 CUT TO SPOIL IN HARD MATERIAL. 26
BILL 08 CULVERT AND DRAINAGE WORKS 26
08-50-005: DITCH/MITRE DRAINS/CATCH WATER DRAINS 26
08-60-001/005: CULVERT CLEANING (PARTIALLY BLOCKED) 26
08-60-003 600MM DIA 26
08-60-021/029 SUPPLY AND INSTALLATION OF CONCRETE PIPE CULVERTS 27
08-60-025 600 MM SURROUNDS 27

08-60-027 900 MM SURROUNDS 27
08-60-037 PROVIDE AND PLACE A142 FABRIC MESH REINFORCEMENT 28
BILL 10GRADING AND GRAVELLING 28
10-50- 003: CARRIAGEWAY GRADING - LIGHT GRADING 29
10-60-001: PROVIDE GRAVEL WEARING COURSE (EXCAVATION, FREE HAUL, SPREADING AND COMPACTION OF GRAVEL) 30
BILL 17: CONCRETE WORKS 31
17-50-013: PROVIDE, PLACE AND COMPACT CLASS 25/20 CONCRETE 31
17-60-005: PROVIDE, CUT, BEND AND FIX INTO POSITION HIGH YIELD REINFORCEMENT BAR TO BS 44461 AS DIRECTED AND AS SHOWN ON THE DRAWING 31
20-50-010: GUARD RAIL INSTALLATION 31
BILL 22: DAYWORKS 32

13 STANDARD FORMS 46

FORM OF TENDER 47

QUALIFICATION INFORMATION 48
TENDER QUESTIONNAIRE 48
CONFIDENTIAL BUSINESS QUESTIONNAIRE 49
ENVIRONMENTAL AND SOCIAL COMMITMENT 51
FORM OF WRITTEN POWER-OF-ATTORNEY 52
FRAUD & CORRUPTION 53
ANTI-CORRUPTION DECLARATION COMITMENT/ PLEDGE 54
CONFLICT OF INTEREST DECLARATION FORM 55
FORM OF AGREEMENT 56

14 PREAMBLES TO BILLS OF QUANTITIES 58

0.0 **INVITATION TO TENDER**

1.0 **As applicable on the Kerra website www.kerra.go.ke**

1. INSTRUCTIONS TO TENDERERS.

1.0 General

1.1 The Employer as defined in the Appendix to Conditions of Contract invites Tenders for the Works Contract as described in the Tender Documents.

1.2 Tenderers shall include the following information and documents with their Tenders, unless otherwise stated:

(a) Certified copy of Certificate of Incorporation.
(b) Valid Tax Compliance Certificate from Kenya Revenue Authority (KRA)
(c) Applicable NCA (copy of NCA).
(d) Principal place of Business backed up by current office lease or proof of ownership.
(e) Authority for Employer to seek references from Tenderer's Bankers.
(f) Power of attorney for the person signing the Tender.
(g) Relevant Work methodology for execution of works.
(h) Tender specific anti-corruption declaration.
(i) Valid and relevant Business Permit (Certified copy).
(j) Key Personnel to be engaged during execution of works by specialization.
(k) A schedule of Relevant Equipment proposed to be used and source, supported by document of ownership or agreement with owners of such equipment.
(l) **Attach** Current (dated at least six months prior to submission of bids) Sworn litigation affidavit.
(m) Attach certified (by commissioner for oaths) copy of **CR12** (not earlier than 12 months from date of submission) complete with certified copies of all Directors' National identity cards.
(n) Fill-in ALL the schedules provided with this tender document; ATTACHMENTS SERVE TO SUPPORT THE SCHEDULES.
(o) No bidder shall be awarded more than two jobs in this financial year (2019-2020)
(p) **Pretender site visit is mandatory bidder MUST** ensure the site visit certificate and site visit register is signed.
(q) All attachments must be authentic. Due diligence may be conducted where it is deemed necessary. Bidders past performance is key.
(r) Bidders shall serialize all pages for each tender document submitted failure to which the bidder shall be disqualified.

NOTE; **Bidders shall ensure that information provided is correct and consistence to the best of their knowledge, Provision of incorrect and inconsistent information with an intention to win a tender will lead to automatic disqualification of the bid. Bidders past performance is key.**

1.3 The Tenderer shall bear all costs associated with the preparation and submission of the Tender.

1.4 The Tenderer, at the Tenderer's own expense, responsibility and risk, shall visit and examine the Site of the Works and its surroundings, to obtain all information that may be necessary for the preparation of the Tender and entering into a Contract for the Works as defined in the Specifications.

1.5 Eligible Tenderers

a) The Invitation to Tender is open to all Tenderers qualified in accordance with the conditions of the Public Notice Advertisements. Only Tenders from qualified Tenderers will be accepted.
b) A Tenderer debarred from participating in Public Procurement by the Public Procurement Regulatory Authority shall not be eligible to submit a Tender.

2.0 Tender Documents

2.1 The complete set of Tender documents comprises the documents listed below and any addenda issued in accordance with paragraph 2.4

(i) Instructions to Tenderers.
(ii) Form of Tender.
(iii) Conditions of Contract and Appendix to Conditions of Contract.
(iv) Specifications.
(v) Drawings and Road Improvement Plan.
(vi) Bills of Quantities/ (whichever is applicable).
(vii) Other documents/materials required by the Employer to be completed and submitted in accordance with these Instructions and Conditions.

2.2 The Tenderer shall examine all Instructions, Forms and Specifications in the Tender documents. Failure to furnish all information required by the Tender documents may result in the rejection of the Tender.

2.3 A Tenderer requiring any clarification of the Tender documents may notify the Employer in writing or by electronic means at the address indicated in the letter of Invitation to Tender. The Employer shall respond to any request for clarification received earlier than seven days prior to the deadline for submission of Tenders. Copies of the Employer's response will be forwarded to all persons issued with Tender documents, including a description of the inquiry, but without identifying its source.

2.4 Before the deadline for submission of Tenders, the Employer may modify the Tender documents by issuing addenda. Any addenda thus issued shall be part of the Tender documents and shall be communicated in writing or by electronic means to all Tenderers. Tenderers shall acknowledge receipt of each addendum in writing to the Employer.

2.5 The Employer may extend, as necessary, the deadline for submission of Tenders in accordance with paragraph 4.5 below, to take account of any addenda issued.

2.6 The timescale given for the Completion of Works has been based on the optimum use of labour-based construction.

3.0 Preparation of Tenders

3.1 All documents relating to the Tender and any correspondence shall be in the English Language.

3.2 The Tender submitted shall comprise the following: -

(a) The Form of Tender;

(b) Priced Bill of Quantities initialed and stamped on each page.

(c) Any other documents/materials required by the Employer to be completed and submitted by Tenderers.

3.3 The Tenderer shall fill in rates and prices for all items of the Works described in the Bill of Quantities. Items for which no rate or price is entered shall be deemed covered by the other rates and prices in the Bill of Quantities.

3.4 The unit rates and prices shall be in Kenya Shillings.

3.5 Tenders shall remain valid for a period of **120 days** from the date of submission. However, the Employer may request the Tenderers to extend the period of validity for a specified additional period. Such a request and the Tenderers' responses shall be made in writing.

3.6 The Tenderer shall prepare one original of the Tender documents as described in these Instructions to Tenderers to be submitted. The **original shall be typed or written in indelible ink and shall be signed by a person or persons duly authorised to sign on behalf of the Tenderer who shall initial all pages** of the Tender where alterations or additions have been made.

3.7 All attachments forming part of the tender submitted **shall** be serialised either ascending or descending at the top or bottom of the page and the last page indicated as so.

3.8 A Tenderer shall not have a conflict of interest. All Tenderers found to have a conflict of interest shall be disqualified. A Tenderer may be considered to have a conflict of interest with one or more parties in this Tendering process, if they:

a) Are associated or have been associated in the past directly or indirectly with employees or agents of the Procuring Entity or a member of a board or committee of the Procuring Entity;

b) Are associated or have been associated in the past, directly or indirectly with a firm or any of its affiliates which have been engaged by the Procuring Entity to provide consulting services for the preparation of the design, specifications and other documents to be used for the procurement of the works under this Invitation for Tenders;

c) Have controlling shareholders in common; or

d) Receive or have received any direct or indirect subsidy from any of them; or

e) Have the same legal representative for purposes of this Tender; or

f) Have a relationship with each other, directly or through common third parties, that puts them in a position to have access to information about or influence on the Tender of another Tenderer, or influence the decisions of the Procuring Entity regarding this Tendering process; or

g) Submit more than one Tender in this Tendering process; however, this does not limit the participation of subcontractors in more than one Tender, or as Tenderer and subcontractor simultaneously.

A Tenderer will be considered to have a conflict of interest if they participated as a consultant in the preparation of the design or technical specification of the project and related services that are the subject of the Tender.

3.9 The original shall be typed or written in indelible ink and shall be signed by a person or persons duly authorised to sign on behalf of the Tenderer. All pages of the Tender, except for un-amended printed literature, shall be initialled by the person or persons signing the Tender. The bid document shall be spiral/book bound and Serialized entirely.

3.10 In the event of a necessity to make alteration, a bidder shall make a single stroke of the text to be amended and write the correct text and countersign; no overwriting or whiting out.

4.0 Submission of Tenders

4.1 The Tender duly completed and sealed in an envelope shall; -

(a) be addressed to the Employer at the address provided in the Invitation to Tender;

(b) bear the name and identification number of the Tenderer as defined in the Invitation to Tender; and

(c) provide an instruction not to open before the specified time and date Tender for opening.

4.2 Tenders shall be delivered to the Employer at the address specified not later than the time and date specified in the Invitation to Tender.

4.3 The Tenderer shall not submit alternative offers.

Each Tenderer may submit only one Tender. Any Tenderer who fails to comply with this requirement will be disqualified.

4.4 Any Tender received after the deadline for submission will be returned to the Tenderer un-opened.

4.5 The Employer may extend the deadline for submission of Tenders by issuing an amendment in accordance with paragraph 2.5 in which case all rights and obligations of the Employer and the Tenderers previously subject to the original deadline will then be subject to the new deadline.

5. Tender Opening

5.2 The Tenders shall be opened in the presence of those Tenderers' representatives who choose to attend at the time and in the place specified in the Invitation to Tender.

5.2 The name of the Tenderer and the total amount of each Tender shall be read out and recorded in a Tender Opening register, a copy of which may on request be made available to any Tenderer. Minutes of the Tender opening, including the information disclosed to those present shall also be prepared by the Employer.

SECTION 1 QUALIFICATION CRITERIA AND EVALUATION

This Section contains all the factors, methods and criteria that the Employer shall use to evaluate applications. The information to be provided in relation to each factor and the definitions of the corresponding terms are included in the respective Application Forms.

SECTION 1 SCHEDULE 1: SCHEDULE OF WORKS CARRIED OUT TO COMPLETION BY THE BIDDER IN THE LAST THREE (3) YEARS (IF ANY)

NAME OF CONTRACT & BRIEF DESCRIPTION OF WORKS	NAME &ADDRESS OF CLIENT	VALUE OF WORKS (KSHS) *	NAME & TEL.CONTACT OF SUPERVISOR
A) General Civil Works 1. 2. B) Specific Civil works Experience 1. 2.			

NB: Letter of award together with its Completion certificate Must be attached for the indicated works.

I certify that the above works were successfully carried out by this firm.

…… ……

(Signature of Bidder) *(Date)*

SECTION 1 SCHEDULE 2: FINANCIAL STANDING

1 Submit copies of audited profit and loss statements and balance sheet for at least the last one year.
2 Give turnover figures of the financial year(s). Quote in millions and decimal thereof.

	Year 1	Year 2
	Ksh.	
Roadworks		
Other civil Engineering works		
Other (specify)		
Total		

SUMMARY OF ASSETS AND LIABILTIES OF THE FINANCIAL STATEMENTS OF THE LAST ONE (1) FINANCIAL YEAR.

	Year 1	Year 2
	KShs.	
1. Total Assets		
2. Current Assets		
3. Bank Credit Line Value		
4. Total Liabilities		
5. Current Liabilities		
6. Net Worth (1-4)		
7. Working capital (2+3-4)		

(a) Name/Address of Commercial Bank providing credit line

……

……

(b) Total amount of credit line(where applicable) KShs……

(Attach certified copies of financial bank statements of the **last Two years**.

Attach a certified copy of Undertaking of the Bank to providing the credit.)

OTHER SUPPLEMENTARY INFORMATION

1. Certified Financial reports for the last **two (2)** years, balance sheets, profit and loss statements, List them below and attach copies (MANDATORY).
   ……

   ……

   ……

   ……
2. Evidence of access to financial resources to meet the qualification requirements. Cash in hand, lines of credit etc. List below and attach copies of supporting documents (MANDATORY)

   ……

   ……

   ……

   ……

3. Name, address, telephone, telex, fax numbers of the Bidders Bankers who may provide reference if contacted by the Contracting Authority. (MANDATORY)
   ……

   ……

   ……

4. Information on current litigation (if any) in which the Bidder is involved.

OTHER PARTY (IES)	CAUSE OF DISPUTE	AMOUNT INVOLVED (KSHS)

I certify that the above information is correct.

…….. ……..
Date Signature Of Bidder

SECTION 1 SCHEDULE 3: KEY PERSONNEL

DESIGNATION	NAME	HIGHEST QUALIFICATION		
Headquarters Partner/Directors or other key staff (give designation)			General Experience (Yrs) N/A	Specific Experience (Yrs) N/A
Site Office Site Agent Site Supervisor Construction supervisors **Other Key Staff** Foremen (i) Earthworks (ii) Concrete (iii) Pavement (iv) Drainage		Diploma in Civil engineering Certificate	3 3	2 2

Note: *The Bidder shall list in this schedule the key personnel to be employed from the Contractor's headquarters and from the Contractor's site office to direct and execute the work together with their qualifications (academic & professional), experience, position held.*

Bidders shall attach Signed and <u>Certified CVs</u> of all key staff. The CVs Must be signed by the respective owners(Staff) and dated.

I certify that the above information is correct.

……..... ……

(Signature of Bidder) (Date)

SECTION 1 SCHEDULE 4; PROPOSED EQUIPMENT.

Mandatory minimum number of equipment required by the Employer for the execution of the project that the bidder must make available for the Contract

Item No.	**Equipment Details**	**Minimum Number Required**	**No of Equipment Owned by the Bidder**	**No. of equipment to be hired**
1	Motor Grader	1		
2	Crawler Tractor	1		
3	Self-propelled single drum vibrating (10Tons)	1		
4	Mobile concrete mixers	1		
5	Excavator/loader	1		
6	Concrete vibrators	1		
7	Tippers payload 10 – 15 tonnes	3		
8	Water tankers (10,000 litres capacity)	1		

The Bidder must indicate the core plant and equipment considered by the company to be necessary for undertaking the project together with proof ownership. (* Mandatory minimum number of equipment required by the Employer for the execution of the project that the bidder must make available for the Contract).

We hereby certify that notwithstanding the list of plant detailed above, we will provide sufficient, suitable and adequate plant in good working order for the successful completion of works.

I certify that the above information is correct.

……..... ……

(Signature of Bidder) (Date)

			Number Qualification Criteria	
Number	Subject	Requirement	Must Meet	Submission Requirements
1	Eligibility	Eligibility	This tender is meant for all eligible citizen contractors in the Financial year **2019-2020 (as per the tender Notice)**	Attach certified copies Identification Cards/Passport for the owners , declaration in the Confidential Business Questionnaire on citizenship
		Conflict of Interest	No conflicts of interest in Sub-Clause 3.8	Meet the requirement as per instruction to bidders
		Employer Ineligibility	Not having been declared ineligible by the Employer (KeRRA), KeRRA Nairobi Region Prequalified contractors Category C	Meet the requirement as per the standard forms attached Declare/ fill the *FRAUD & CORRUPTION* Form, and be in Prequalified List of contractors
		Incorporation & Registration	-Certificate of incorporation to - Proof of registration with the (NCA Certificate) Roads Works	Attach Notarized by (Commissioner of oaths) Copy of Certificate of incorporation and a copy of registration with the (NCA) as a Roads Contractor
2	Historical Contract Non-Performance	History of Non-Performing Contracts	Non-performance of a contract did not occur within the last five (5) years prior to the deadline for application submission based on all information on fully settled disputes or litigation. A fully settled dispute or litigation is one that has been resolved in accordance with the Dispute Resolution Mechanism under the respective contract, and where all appeal instances available to the applicant have been exhausted.	Provide litigation history declaration form notarized by Commissioner of oaths
		Pending Litigation	All pending litigation shall in total not represent more than thirty percent (30%)] of the Applicant's net worth and shall be treated as resolved against the Applicant.	
3	Financial Situation	Working Capital	financial statements acceptable to the Employer, for the last five [5] years to demonstrate: (a) the current soundness of the applicant's financial position and its prospective long-term profitability, and (b) cash flow amount of Kshs.500,000 (Five Hundred Thousand) equivalent working capital	copies of financial statements. signed by owners, complete the provided schedule, and bank statements tilizati by Commissioner of oaths
		Turnover	Minimum average annual construction turnover of KShs. 3 Million [Three Million], calculated as total certified payments received for contracts in progress or completed, within the last three [(3)] years	
4	Experience	General Construction Experience	Experience under construction contracts in the role of contractor, subcontractor, or management contractor for at least the last three (3) years prior to the applications submission deadline	Copy of Certificate of incorporation
		Specific Construction Experience	(a) For roadworks above 6 million Participation as contractor, management contractor or subcontractor, in at least two (2) contracts within the last Three (3) years, each with a value of at least KShs 2 Million (Two Million, that have been successfully and substantially completed and that are similar (physical size, complexity, methods/technology or other characteristics as described in Section for the Scope of Works) to the proposed works.	Attach copies of letters of award or Purchase Orders, or completed Agreement(s) and respective **completion certificates**
			- -	
		Work Methodology	Submission of a brief work methodology in accordance with sub-clause, The Methodology should be relevant to the works advertised	Provide written document between 3-8 pages
5	Current Commitments	The total value of outstanding contract sums must not exceed KShs. 1 Million	Declare current commitment status	

SECTION 1 SCHEDULE 5: WORK METHODOLOGY

Give a brief description of how you intend to carry out the work including traffic management, quality assurance of works and any designs to be carried out by the Bidder.

6.0 Tender Evaluation

6.1 Information relating to the examination, clarification, evaluation and comparison of Tenders and recommendations for the award of the Contract shall not be disclosed to Tenderers or any other persons not officially concerned with such process until the award to the successful Tenderer has been announced. Any effort by a Tenderer to influence the Employer's officials, processing of Tenders or award decisions will result in the rejection of the Tender.

6.2 Evaluation process shall be carried out in Four stages namely;

(i) Preliminary stage.
(ii) Instruction to bidders' responsiveness.
(iii) Technical evaluation/Post Qualification
(iv) Financial/Commercial evaluation.

	Requirement	Submission Requirements	Max Score	Evaluators Score
1	Documentary proof of past experience:			
	General Experience: experience as a contractor in civil works for at least the last two (2) years prior to the applications submissions deadline	Section 6 Schedule 1	10	
	Specific Experience: Participation as a contractor in at least two (2) contracts within the last two (2) years that have been successfully and substantially completed and that are similar to the proposed works.		10	
2	Financial capability or access to credit to the level of 50% of the bid sum subject to grant in appendix to form of agreement by the employer	Section 6 Schedule 2	20	
3	Key personnel to be engaged in the works and their qualifications	Section 6 Schedule 3	20	
4	List of equipment owned or agreement with such owners	Section 6 Schedule 4	10	
5	Draft resourced program of works and method statement of works giving details of activities and the proposed quality control measures. (should demonstrate understanding of the scope of works and other general and specific requirements)	Section 6 Schedule 5	30	
	Total score		100	

Only tenderers who score over 75% shall qualify for financial evaluation

6.8 Financial evaluation

After checking financial conformity in accordance with item 1.2 (h) and conducting arithmetic checks in accordance with item 6.5, tenders shall be subjected to a financial analysis

Determination of Responsiveness

6.3 Prior to the detailed evaluation of tenders, the Employer will determine whether each tender is substantially responsive to the requirements of the tender documents.

6.4 For the purpose of this clause, a substantially responsive tender is one which conforms to all the terms, conditions and specifications of the tender documents without material deviation or reservation. A material deviation or reservation is one which affects in any substantial way the scope, quality, completion timing or administration of the Works to be undertaken by the tenderer under the Contract, or which limits in any substantial way, inconsistent with the tender documents, the Employer's rights or the tenderers obligations under the Contract and the rectification of which would affect unfairly the competitive position of other tenderers who have presented substantially responsive tenders.

6.5 Each price or unit rate inserted in the Bills of Quantities shall be a realistic estimate of the cost of completing the works described under the particular item including allowance for overheads, profits and the like. Bids exceeding the estimate will not be evaluated. Should a tender be seriously unbalanced in relation to the Employer's estimate of the works to be performed under any item or groups of items, the tender shall be deemed not responsive.

6.6 A tender determined to be not substantially responsive will be rejected by the Employer and may not subsequently be made responsive by the tenderer by correction of the non-conforming deviation or reservation.

6.7 Prior to the detailed evaluation of Tenders, the Employer shall determine if each Tender:-

a) Meets the eligibility criteria defined in paragraphs 1.2 and 1.5.
b) Has been properly signed;

c) Is substantially responsive to the requirements of the Tender documents.

d) The Tender is valid for the requisite period.

The Employer will reject any Tenders deemed to be non-responsive on the above criteria.

6.8 A substantially responsive Tender is one which conforms to all the terms, Conditions and Specifications of the Tender documents, without material deviation or reservation. A material deviation or reservation is the one:-

a) which affects in any substantial way the scope, quality or performance of the Works;

b) which limits in any substantial way, inconsistent with the Tender documents, the Employer's rights or the Tenderer's obligations under the Contract;

c) Whose rectification would affect unfairly the competitive position of other Tenderers presenting substantially responsive Tenders.

6.9 Tenders determined to be substantially responsive will be checked for any arithmetic errors. Errors will be corrected as follows:

(a) where there is a discrepancy between the amount in figures and the amount in words, the amount in words shall prevail;

(b) where there is a discrepancy between the arithmetically correct line item Amount, resulting from the multiplication of the Unit Rate and the Quantity, and the Amount entered, the latter shall prevail and the Unit Rate shall be adjusted accordingly.

(c) for Lumpsum items, only the Amount will be considered, disregarding any filled in unit rate.

(d) where there is a discrepancy between the Tender Price as stated in the Form of Tender and the Tender total in the main Summary of the Bills of Quantities, the Tender Price shall prevail. The Employer shall notify the Tenderer and request that the Tenderer agrees to the Tender Price. The Unit Rate for the Items where the discrepancy occurs shall be adjusted by the Engineer. If the Tenderer fails to accept the corrected figure the Tender shall be rejected. Any discrepancy greater than 15% of the corrected figure shall result in rejection of the Tender.

6.10 The Employer at his discretion may request any Tenderer for clarification of the Tender, including a breakdown of Unit Rates. The request for clarification and the response shall be in writing or electronic means.

6.11 Post-qualification of Tenderer/Due diligence

The Procuring Entity will determine to its satisfaction whether the Tenderer that is selected as having submitted the lowest evaluated responsive Tender is qualified to perform the contract satisfactorily.

The determination will take into account the Tenderer's previous performance. It will be based upon an examination of the documentary evidence of the Tenderer's qualifications submitted by the Tenderer, as well as such other information as the Procuring Entity deems necessary and appropriate.

An affirmative determination will be a pre-requisite for award of the contract to the Tenderer. A negative determination will result in rejection of the Tenderer's Tender, in which event the Procuring Entity will proceed to the next lowest evaluated Tender to make a similar determination of that Tenderer's capabilities to perform satisfactorily.

7 Award of Contract

7.1 The award will be based on post-qualification criteria.

7.2 The award of the Contract will be made to the Tenderer who has offered the lowest evaluated Tender Price.

7.3 The Employer reserves the right to accept or reject any or all Tenders and to cancel the Tendering process at any time prior to the award of the Contract without thereby incurring any liability to the affected Tenderer or Tenderers or any obligation to inform the affected Tenderer(s) of the grounds for the action.

7.4 The Tenderer whose Tender has been accepted will be notified of the award prior to the expiration of the Tender validity period in writing or by electronic means. This notification will state the tender sum which the Employer will pay the Tenderer in consideration of the execution, completion, and maintenance of the Works as set out in the Contract. The Letter of Acceptance will constitute a binding Agreement, prior to the Tenderer signing the Contract Agreement.

7.5 The Contract Agreement will incorporate all agreements between the Employer and the Tenderer. It will be signed by the Tenderer, not earlier than **14 days** following the date of the Letter of Acceptance.

8.0 CONDITIONS OF CONTRACT

PART I: GENERAL CONDITIONS OF CONTRACT

The General Conditions of Contract are the FIDIC Short Form of Contract, First Edition, 1999, published by the International Federation of Consulting Engineers (FIDIC).

The General Conditions of Contract are linked with the Conditions of Particular Application, referred to as Part II, by the consecutive numbering of the Clauses, so that Part I and II together comprise the Conditions governing the rights and obligations of the Parties. In case of any inconsistency between the Conditions contained in Part I and those in Part II, the Conditions contained in Part II shall prevail.

The Tenderer is deemed to have read and fully complied with the General Conditions of Contract.

PART II: CONDITIONS OF PARTICULAR APPLICATION

The Conditions of Particular Application amplify the FIDIC Short Form of Contract so as to be, together, applicable to the Contract.

GENERAL PROVISIONS

5.1 ***Definitions***

Add new Paragraph to sub-clause 1.1.8

1.1.8 (a) "**Week**" means a period of seven (7) consecutive days

1.1.8 (b) "**Month**" means calendar month

Add new paragraph to sub-clause 1.1.20 to 1.1.25

1.1.20 "**Appendix**" as referred to in the Conditions of Contract means Appendix to Form of Agreement.

1.1.21 **"Labour-Based Methods"** means work methods whereby activities are carried out using labour where technically and economically viable and appropriate equipment is only used when labour alone will not achieve the required standards.

1.1.22 **"Task "** means the amount of work to be done by one individual worker or a gang in order to earn one day's wage.

1.1.23 **"Young Person"** means an individual male or female, who has attained the age of 16 years but has not attained the age of 18 years.

1.1.24 **"R2000 Strategy"** means an initiative by the Government of Kenya to improve the maintenance of the country's Road Network by giving priority to maintenance through network approach, using appropriate technology, labour-based methods, local resources and increased usage of small-scale entrepreneurs.

1.2 Interpretation

Add sub-clause 1.2.1 as follows

1.2.1 Words having the same meaning

In the Contract Documents the Employer's Representative is generally designated as the Engineer.

5 THE CONTRACTOR

4.1. General Obligations

Add. In particular the following obligations shall apply

Add the following new sub-Clauses:

4.1.1. R2000 Strategy

The Works shall generally be carried out using the R2000 Strategy and work approach, with its predominant emphasis on the use of labour-based construction methods where they are technically and economically viable. Intermediate equipment, as agreed by the Engineer may be used in other appropriate circumstances.

4.1.2 Approval of Equipment

The Contractor shall submit for the Engineer's approval within seven days prior to the commencement date a list of equipment, which is intended for use on site. He shall notify the Engineer prior to bringing in equipment and shall further obtain the Engineer's approval prior to removing any equipment from site.

4.1.3 Recruitment of Labour

4.1.3.1 The Contractor shall ensure that there is a sufficient and suitable deployment of labour at all times throughout the Contract.

4.1.3.2 All general workers employed by the Contractor shall, to the extent possible, be recruited from the surrounding population. Exceptions may be made if sufficient local labour cannot be recruited and only with the approval of the Engineer. There shall be no discrimination in recruitment based on tribe, religion, political affiliation, age, disability or gender, and the recruitment system shall be fair and transparent.

4.1.3.3 The Contractor shall take particular note of the Government policy regarding the employment of women and youth in the recruitment process and shall take all possible steps to attain the targets of 30% of the labour force for each group.

4.1.4. Employment of Young Persons and Children

The Contractor shall comply with the Employment Act Chapter CAP 226 concerning the Employment of Young Persons and Children.

4.1.5. Conditions of Employment of Labour

The Contractor shall observe and tiliza the following conditions in respect of all persons employed by him in the execution of the Contract: -

a) Where possible, labour shall be employed on a daily task basis. The size of the daily task shall be that which can reasonably be expected of a worker during a normal working day (8 hours), and all task rates shall be approved by the Engineer.

b) The Contractor shall pay wage rates and observe hours and conditions of employment of labour as established by Kenyan Labour Laws and by agreement between Employers or other recognized authorities and trades unions for similar trades or industries in the District where the Contract Works are to be carried out.

c) The Contractor shall recognize the freedom of employees to be members of trades unions. The Contractor's attention is drawn to the requirements of the Trade Unions Act (CAP 233), which states that if at least 25% of the employees are members of a particular Trade Union Organisation, then the Contractor is legally bound to tilizati and negotiate with the Organisation.

4.1.6. Reporting Requirements

The Contractor shall, when required by the Engineer, submit labour returns in such form and detail and at prescribed intervals showing the staff and the number of the several classes of labour employed by the Contractor.

4.1.7. Non-payment of Wages by Contractor

(a) The Employer may demand from the Contractor reasonable proof of payment of wages to the employees.

(b) The Employer may, upon the Contractor defaulting in payment, pay the money due, out of any funds due or which may become due to the Contractor under the Contract.

(c) In such an event, the Contractor shall co-operate with the Employer in processing the payment of the correct amounts of money due to the labour force by submitting the relevant muster rolls, workday reports and pay-sheets, and the Contractor shall be represented at the time payments are made.

(d) Direct payment to workers by the Employer shall attract a penalty as stated in the Appendix to cover expenses incurred in the administration of such labour payments.

4.1.8. Contract with Employees

(i) Working days

The Contractor shall recognize tiliza non-working days and allow in the Works Programme for those days on which labour is not expected to work.

(ii) Provision of Hand Tools

The Contractor shall provide his labour force with a sufficient number of hand tools of good quality and shall make the necessary provisions to maintain the tools in a good and safe working condition. The Engineer may instruct the Contractor to replace worn out, faulty or unsafe hand tools.

(iii) Safety and Health

(a) The Contractor shall be responsible for the safety of all workers. In collaboration with, and to the requirements of the local health authorities, the Contractor shall ensure that first aid equipment and medical stores are available on the Site at all times throughout the period of the Contract, and shall also designate a Health and Safety Officer from amongst the staff.

(b) The Contractor shall be responsible for the provision of potable water for the workers at appropriate locations on the Site.

(c) In the event of any outbreak of illness of an epidemic nature the Contractor shall comply with and carry out such regulations, orders and requirements as may be made by the Government or the local medical or sanitary authorities for the purpose of dealing with and overcoming the same.

(iv) Contractor to Preserve Peace

The Contractor shall take all reasonable measures to ensure that all personnel on site comply with the Statutes, Ordinances, Laws, Regulations and By-Laws in force in Kenya, and to prevent accidents or any riotous or unlawful tilizat by or amongst the employees on or in connection with the Works, and for the preservation of the peace.

4.1.9. Water for the Works

The Contractor shall supply all water for the Works.

4.1.10. Environment

The Contractor shall take all reasonable measures to protect the environment on the Site and to avoid damage or nuisance to persons and property. In particular, the Contractor shall carry out all activities in a manner that ensures: -

a) Minimum soil erosion on slopes and sedimentation deposition in the drainage works;

b) Maximum preservation of trees and shrubbery;

c) No entrance or accidental spillage of solid matters, debris and other pollutants and waste into water courses

d) The safe disposal of rubbish and waste.

4.1.11. HIV/AIDS

The Contractor shall institute on-site HIV/AIDS awareness and prevention campaigns for the duration of the Contract. This shall include the siting of information posters, the issue of condoms and also informatory meetings on site for the employees. The meetings shall be arranged with the assistance of the local health authorities and AIDS Campaign personnel and shall be during working hours without loss of pay.

4.2. Performance Security

The Performance Security shall be valid until the date of issue of the Employer's notice (Taking Over Notice). The Employer shall return the Security to the Contractor within 14 days thereafter.

A Performance Security in the form an Insurance Bond shall only be allowed from an Insurance Company approved by the Public Procurement Regulatory Authority (PPRA) and in a Form also approved by the PPRA.

9. TIME FOR COMPLETION

9.1 Execution of the Works

Progress Review Meetings

Regular progress review meetings between the Employer and the Contractor shall be held at times decided by the Engineer.

9.2 Programme

Intended Construction Procedures, Order and Methods

The Contractor shall show in the Programme of Works, the procedure, order and methods proposed for carrying out Works with specific emphasis on the labour requirements, equipment tilization and productivity.

Programme Updating

Within the intervals stated in the Appendix or as required by the Engineer the Contractor shall submit an updated Programme of Works.

10. VARIATIONS AND CLAIMS

10.2 Permitted Variations

Variation are permitted where necessary and should be carried out inline with the existing procurement legalities

5. CONTRACT PRICE AND PAYMENT

Valuation of the Works

11.1.1. Price Adjustment

The Contract shall not be subject to Price Adjustment.

a) Local Labour

For the purpose of this Sub Clause:

(i) "Local Labour" means skilled, semi-skilled workers of all trades engaged by the Contractor on the Site for the purpose of or in connection with the Contract or engaged full time by the Contractor off the site for the Purpose of or in connection with the Contract (by way of illustration but not limitation: workers engaged full time in any office, store, workshop or quarry).

(ii) "Basic Rate" means the applicable basic minimum wage rate prevailing on the date 28 days prior to the latest date for submission of Tenders, by reason of any National or State Statute or Ordinance.

(iii) "Current Rate" means the applicable basic minimum wage rate for Local Workers by reason of any National or State Statute or Ordinance, prevailing on any date subsequent to the date 28 days prior to the latest date set for submission of Tenders.

5) Specified Materials

For the purpose of this Sub-Clause

(i) "Specified Materials" means the basic materials required on the Site for the execution and completion of Works, which shall include fuel and lubricants; cement; aggregates; steel reinforcement; timber and gravel.

(ii) "Basic Prices" means the prices for the specified materials prevailing on the date of submission of Tenders.

The Engineer shall compile a Schedule of Basic Prices, upon which any claim for Variation shall be based, prior to the award of the Contract. The Contractor shall be entitled to a copy of the Schedule upon request to the Engineer.

(iii) "Current Prices" means the prices for the specified materials prevailing on any date subsequent to the date 28 days prior to the latest date set for the submission of the Tenders, by reason of any National or State Statute or Ordinance,

c) Overheads and Profits Excluded

In determining the amount of any adjustment to the Contract Price pursuant to this Sub-Clause no account shall be taken of any overheads or profits.

(d) Adjustments

The net amount of difference between the basic price and the current price payable by the Contractor when the specified services are provided or materials are bought shall, as the case may be, be paid to the Contractor.

(e) Notice and Records

The Contractor shall keep such books, accounts, invoices, receipts, time sheets and other documents and records as are necessary to enable any adjustment under this Clause to be made and shall at the request of the Employer furnish these duly verified in such a manner as the Employer may require for examination and checking.

11.1.2. Exclusion of Price Adjustment for Late Completion of Works

In the event of the Contractor failing to complete the Works within the Time of Completion as defined under Clause 7, or extension of the Contract period granted, the provisions of Clause 11 shall cease to apply.

Any part of the Works executed after the expiry of the Time for Completion shall be valued at a price levels prevailing at the contractual date of Completion.

11.1.3. Day works

The Contractor shall not execute any work on a Dayworks basis except by written order of the Engineer

Unless otherwise adjusted, payments for Dayworks shall be subject to price adjustment in accordance with the provisions of Clause 11.1.1

11.3. Interim Payments

11.3.1. Advance Payment

The Employer may make Advance Payment to the Contractor on application after signing the Contract, against a Bank Guarantee, or approved Insurance Bond, in the form set out in the Tender Documents, this Advance Payment shall be up to a maximum amount stated in the Appendix.

11.3.2. Deductions for Re-payment of Advance Payment

Reimbursements of Advance Payment shall be made according to the schedule as stated in the Appendix.

11.3.3. The Minimum Amount of Interim Payment.

The minimum amount of an Interim Payment shall be stated in the Appendix.

APPENDIX TO FORM OF AGREEMENT

This Appendix to Form of Agreement forms part of the Agreement.
(Note: The Contractor shall Sign this form before submitting offer.)

Name of Bidder/Contractor:……

Item	**Sub-clause**	**Data**
Time for Completion	1.1.9	**3 (Three)** Months.
Priority of Documents	1.3	The documents forming the Contract shall be interpreted in the following order of priority: • the Contract Agreement and Appendix • the Letter of Acceptance • the Form of Tender • the Conditions of Contract, Part II - Conditions of Particular Application • the Conditions of Contract, Part I - General Conditions of Contract • the Specifications • the Drawings, • the Priced Bill of Quantities
Law of Contract	1.4	Laws of the Republic of Kenya
Language	1.5	English
Provision of Site	2.1	On Commencement Date
Authorised Person	3.1	. The Director General KeRRA
Name and Address of Employer's Representative	3.2	The Deputy Director, KeRRA P.O Box 5277-00506 NAIROBI
Penalty to the Contractor for Employer paying workers on his behalf	4.1.8	10% of the amount paid to the workers.
Bid security Security Amount	4.4 4.4 4.4	N/A N/A N/A
Perfor mance Security	4.4	N/A
Engineer's Estimate for the Works		**KSH 8,483,660.00**
Requirements of Contractors Design	5.1	Not applicable
Programme ⇨ Time of Submission ⇨ Form of Programme ⇨ Interval Updates	 7.2 7.2 7.2.2	 Within 14 days of Commencement Date Bar Char Monthly

Item	Sub-clause	Data
Liquidated Damages Amount payable due to failure to complete	7.4	0.01% of Contract Price per Day to a limit of 1% of Contract Price.
Percentage of Retention	11.4 and 11.5	N/A
Maximum Amount of Advance Payment	11.3.1	Not Applicable
Form of Guarantee for Advance Payment	11.3.1	Not Applicable
Valuation of Works	11.1.3	Re-measurements with Bills of Quantities
Repayment Schedule for Advance Payment	11.3.2	N/A.
Minimum Amount of Interim Payment	11.3.3	20% of the Contract Value
Currency of Payment	11.7	Kenya Shillings
Rate of Interest	11.8	Simple Interest at a rate of 2% above mean Base Lending Rate as issued by the Central Bank of Kenya.
Insurance	14.1	Not Required
Insurance ⇨ The Works, materials plants & fees ⇨ Contractor's Equipment ⇨ Third party injury to persons and damage to property ⇨ Workers compensation	14.1	Amount of Cover The Contract Price stated in the Agreement +15%. Full replacement cost. As per the current Laws of Kenya As per the Current Labour Laws
Arbitration ⇨ Rules ⇨ Appointing Authority ⇨ Place of Arbitration	 15.3 15.3 15.3	 CAP 49 of the Laws of Kenya Chairman Chartered Institute of Arbitrators, Kenya Branch. District Headquarters

..... Signature of Bidder/Contractor

SPECFICATIONS, CONTRACT DRAWINGS AND BILL OF QUANTITIES

BILL 01: PRELIMINARY AND GENERAL ITEMS

Scope:

This bill comprises those items that are required at the Commencement and Completion of the Works or that are Provisional Items applicable for the duration of the Works.

01-60- 001 Contract Supervision

Provisional sum available for the Engineer for expenses incurred for supervising the contract such as allowances, casual wages and transportation within the project area.

Measurement and Payment:

Provisional Sum: Payable by the Contractor to the Engineer through certification as directed by the Engineer. No mark-up is included in this item.

Work Method: NA

01-60-004 Quality Control Tests

The Engineer may instruct the Contractor during the progress of the Works to carry out quality control tests to check materials and standards of workmanship, against the Specifications.

Where such tests indicate defective standards, the Engineer shall instruct the Contractor to rectify the defects to the Engineer's satisfaction and at the Contractor's expense.

The Engineer shall include a Provisional Sum for this item to be expended only as and when the Contractor is instructed to carry out tests at approved material testing laboratories.

Measurement and Payment

Reimbursable item based on actual costs incurred by the contractor including sampling, transportation and testing.

Work Method: NA

01-60-005 Publicity Sign Boards

The Contractor shall provide Sign Boards as specified on the Drawings or as directed by the Engineer. The Sign Boards shall be placed at the beginning and end of the road or road bill covered by this Contract.

Sign Boards shall be maintained for the duration of the Works, and removed on completion.

Quality Control

The Engineer shall check that Sign Boards have been erected in accordance with Drawings and Specifications.
Measurement: Number
The unit of measurement shall be number of Sign Boards erected
Payment

The unit rate shall be the full compensation for labour, tools, materials and incidental costs required for carrying out the work .
Work Method: NA

BILL 04: SITE CLEARANCE

Scope

This bill covers the clearance of bushes, shrubs, grasses, trees, stumps, boulders, stripping and grubbing of the topsoil, removal of anthills and other unsuitable materials for the specified widths of the road, quarry and borrow areas. The distinction between light and heavy bush shall be decided by the Engineer.

The minimum site clearing widths for each of the activities shall be as shown in Table 4.1

Table 4.1: Site Clearing Widths

Road Category	*Running Surface*	*Stripping and Grubbing*	*Trees, Stumps, Boulders*	*Bush Clearing*
A/B/C + Secondary Roads	6.0 m	10.6 m	10.6 m	14.0 m
D/E + Minor Roads	5.4 m	10.0 m	10.0 m	13.0 m
RAR Roads	4.5 m	7.9 m	8.0 m	11.0 m
Minor / RAR roads with insufficient widthsor Temporary sections	3.5 m	6.9 m	7.0 m	9.0 m

04-50-004 Bush Clearing (Light)

The Contractor shall clear all vegetation including small trees, and shrubs with their root systems. Grasses and any undergrowth shall be cut to a height of not more than 100mm. The cleared material shall be collected and disposed of away from the side drains and in a manner that causes no visibility obstruction to traffic.

This activity shall be carried out as either Machine Based or as Labour Based as defined in the Bills of Quantity or as instructed by the Engineer.

Work Method: LB or MB

Quality Control

The Engineer shall check the cleared widths at 50 metre intervals.

Measurement Unit: m^2

The measurement shall be the area cleared to the specified width over the length as instructed by the Engineer.

Payment:

The unit rate shall be the full compensation for all labour, tools and incidental costs required to complete the work.

BILL 05: EARTHWORKS

This bill covers the excavation of soil and the placing, watering and compaction of hard and soft material to form the road formation.

05-50-009 Cut to spoil in hard material.

These activities should be done in accordance with Bill 5, sub clauses 5.01 to 5.17 in the Standard Specifications for Roads and Bridges 1986.

BILL 08 CULVERT AND DRAINAGE WORKS

This bill covers all Works in connection with the installation of concrete pipe culverts; inlet and outlet structures; drifts and drainage protection Works; and the construction of Scour Checks

08-50-005: Ditch/Mitre Drains/Catch water Drains

The Contractor shall excavate side drains, mitre drains and catch water drains to the dimensions shown on the Drawings and at locations as directed by the Engineer. They shall be excavated in a manner to minimise erosion at the discharge point. The material excavated from the drains shall be used to form the side drain bund directing water to the mitre-drain, and a bund on the lower side of the cut-off drain, or used for forming camber or disposed of as directed by the Engineer.

This activity shall be carried out either as Machine Based, Labour Based or a mixture of the two as defined in the Bills of Quantity or as instructed by the Engineer.

Work Method: LB, MB, LB-MB

Quality Control

The longitudinal profile shall have a gradient of maximum 4%.
The dimensions of the drains shall have maximum tolerances of $\pm$20mm
The location of the drains shall be approved by the Engineer.

Measurement Unit: m^3

The measurement shall be the volume of material excavated as measured on site in approved drains.

Payment

The unit rate shall be full compensation for labour, tools, equipment and incidental costs required for carrying out the work.

08-60-001/005: Culvert Cleaning (partially blocked)

08-60-003 600mm dia

This activity involves the cleaning of culverts of specified sizes including pipe barrels, the outlet/inlet structures, and the outlet drains, keeping them free of all debris, weed, silt and any obstruction to ensure free passage of water at all times. The debris shall be deposited in approved spoil dumps as directed by the Engineer

Partially blocked culverts shall be those with less than half of the barrel blocked.

Correct widths and slopes of the outlet drains shall be maintained. The gradient of the outlet drain shall be not less than 2 %.

All broken culvert barrels discovered in the course carrying out this activity shall be reported to the Engineer.

This activity shall be carried out before the rains, or as directed by the Engineer.

The Contractor shall use **Labour** to carry out this item of work

Work Method: **LB**

Quality Control

The culverts shall be checked as free of debris to the satisfaction of the Engineer.

Measurement Unit: m

The measurement shall be the length of culvert, including the outlet drain, cleaned

Payment

The unit rate shall be full compensation for labour, tools and incidental costs required to carry out the work.

08-60-021/029 Supply and Installation of Concrete Pipe Culverts

08-60-025 600 mm surrounds

08-60-027 900 mm surrounds

The Contractor shall supply, lay and join concrete pipes to form culverts, including the concrete bedding; haunching or surrounds; and backfilling, in accordance with the Drawings for the Type and diameter specified in the Contract or directed by the Engineer.

The pipes shall be of Class 20/20 concrete, at least 28 days cured, and manufactured on site or procured from a supplier approved by the Engineer and preferably ogee jointed. The pipes shall be laid on a bedding of Class 15/20 concrete of dimensions as shown on the Drawings and jointed with cement mortar 1:4.

The culvert gradient including the outlet shall be a minimum 2%.
The pipes shall be surrounded with Class 15/20 concrete to the dimensions shown on the Drawings or as directed by the Engineer.

Backfilling shall be carried with approved material and compacted in layers not exceeding 150 mm loose depth and placed evenly on each side of the pipe. Ramps shall be shaped to achieve a minimum overfill of 75% of the pipe diameter, and shall be tapered back on the carriageway to provide a gradual approach, as directed by the Engineer.

If the Contractor wishes to construct culverts on site, using inflatable or collapsible forms the Engineer's approval shall first be sought for the proposed working method.

On completion the inside of the culvert shall be smooth, without displaced joints or other obstructions and true to line and level.

The Contractor shall use **Labour** and appropriate compaction **Equipment** to carry out this item work

Work Method: **LM-MB**

Quality Control

- Concrete quality shall be checked for cracks, honey combing, and other defects.
- Before the pipes are laid, the gradient of the concrete bedding shall be checked and shall not be less than 2%
- The joints shall be checked to see that they have been properly made.

Measurement Unit: m

The measurement shall be in linear metres of the installed Type and size of culvert specified, measured net according to the Drawings.

Payment

The unit rate shall be the full compensation for labour, tools, materials, equipment and any other incidentals that may be required in carrying out the work.

08-60-037 Provide and place A142 fabric mesh reinforcement

These activities should be done in accordance with Bill 8, sub clauses 8.01 to 8.20 in the Standard Specifications for Roads and Bridges 1986.

The Contractor shall use both **Labour** and appropriate **Equipment** to carry out this item.

Work Method: ***LM-MB***

Quality Control

- The workability and mix of concrete for the classes 15/20 and 20/25 shall be checked using the slump test and shall have a slump limit as directed by the Engineer.
- The laying and joining of the culverts shall be subject to the approval of the engineer.

Measurement Unit: m

The measurement shall be the length of culvert laid.

Payment

The unit rate shall be the full compensation for labour, tools, materials, formwork, equipment and other incidentals that may be required in carrying out the work.

Bill 10 GRADING AND GRAVELLING

Scope:

Grading covers the work of reinstating the road carriageway to the correct camber by removing the high points and filling gullies, corrugations, and wheel ruts to restore a smooth running surface.

Grading can either be done by labour (Manual Reshaping) or by Machine (Motorized grading or towed grading).

Manual reshaping is preferable where there is sufficient labour. For existing roads with side drains light manual reshaping should be used as defined in 10-50-004. Heavy manual reshaping should be used for roads that have deteriorated to such an extent that the drains and carriageway need to be re-instated. Heavy Manual Reshaping is defined under Bill 5 – Earth Works.

Light grading is carried out on good and fair roads as a maintenance activity while heavy grading is for re-establishing a road in poor or very poor condition.

Gravelling consists of the excavation; loading, hauling, dumping, spreading and compacting using approved equipment of gravel wearing course material on the formation of the road carriageway. Gravel shall include lateritic gravel, quartzitic gravel, calcareous gravel, decomposed rock, soft stone coral rag, clayey sand and crushed rock.
The material may be obtained from quarries, borrow pits or excavation in cuttings as directed by the Engineer. Gravel material shall conform to the requirement given in Table 10.1

Table 10.1: Requirement for Gravel Wearing Course

GRADING REQUIREMENTS	
Sieve (mm)	% by Weight Passing
40	100
28	95 – 100
20	85 – 100
14	65 – 100
10	55 – 100
5	35 – 92
2	23 – 77
1	18 – 62
0.425	14 – 50
0.075	10 – 40

For "Quarry Waste" gravel stones of maximum dimension 80mm may be permitted

PLASTICITY INDEX REQUIREMENTS PI		
Zone	Min	Max
WET: Mean annual rainfall > 500mm	5	20
DRY: Mean annual rainfall < 500mm	10	30

BEARING STRENGTH REQUIREMENTS		
Traffic VPD	CBR	DCP Equivalent mm/Blow
>15	20	11
<15	15	14
CBR at 95 % MDD, Modified AASHTO and 4 days soaking		
Lower quality material (CBR 15) may be accepted if no better material can be found		

The Engineer shall approve quarries and the extent of their exploitation. The possible quarries shall be shown to the Contractor prior to commencement of the Works. The Contractor shall be responsible for the acquisition of the quarry rights and shall conduct respective negotiations with landowners and affected communities.

Alternative sources of gravel material whose quality can be shown to be in compliance with the specification requirements may be used, with the approval of the Engineer. The Contractor is deemed to have included in his rates for the provision of the gravel material.

10-50- 003: Carriageway Grading - Light Grading

Light grading shall only be done when there is sufficient moisture in the material. The Contractor shall grade the carriageway to control roughness and corrugations using either a Towed or a Motor grader. The width of the carriageway shall be as specified for the Road Class.

Pegs 200 to 300mm long shall be placed at 20 m intervals to mark edge of the carriageway

The material shall be bladed toward the centre of the road, starting from both edges, to the specified camber. Where instructed by the Engineer, suitable materials from the side drains may be used to fill potholes and gullies in the carriageway. Any further material needed to re-form the camber shall be from an approved source.

Compaction shall be achieved using the wheels of the equipment, tracked evenly over the full surface, or by other approved means.

No grading shall be carried out in dry conditions.

The Contractor shall use **Equipment** to carry out this item.

Work Method: **MB**

Quality Control

- The width of the carriageway shall be checked at every 50m intervals and have a tolerance of +50mm or -20mm

- The camber shall be checked with a camber board at 25m intervals and shall have a tolerance of ± 1%
- Longitudinal levels shall be checked with a straight edge of minimum 2.7 m length. Maximum tolerance of ±10 mm.

Measurement Unit: m^2

The measurement shall be the area of carriageway graded, measured net according to the specified width and measured length graded.

Payment

The unit rate shall be the full compensation for labour, tools, equipment and incidental costs required for carrying out the work.

10-60-001: Provide Gravel Wearing Course (Excavation, Free haul, spreading and Compaction of Gravel)

Excavation of Gravel

Gravel shall be excavated from quarries approved by the Engineer, and the Contractor shall inform the Engineer if the quality/availability of the gravel changes during the course of excavation.

Stones and boulders with one dimension greater than 80mm shall be removed from the excavated gravel and deposited outside the quarry at locations approved by the Engineer. Such stones and boulders may be reused in other parts of Works with the approval of the Engineer.

Excavation and loading shall normally be by labour unless, at the request of the Contractor, the Engineer allows the use of equipment.

The Contractor shall use **Labour** and/or **Equipment** to carry out this work, as directed by the Engineer.

Work Method: **LB or MB**

Quality Control:

- Oversize stones and boulders shall not be loaded for haulage to the road.
- Areas containing deleterious material shall not be excavated.

Free haul, spreading and Compaction of Gravel

Free haul involves the transportation of gravel material for the first 1.5 km from the quarry. The Contractor shall spread and compact gravel material, in a manner to ensure a uniform thickness of the layer across the full width of the carriageway and shaped to the specified camber. Spreading also includes the removal of any

oversized stones or boulders, which cannot be broken down to the required size, to spoil dumps. Gravel shall be spread within 24 hours of off-loading.

Compaction of the gravel material shall be carried out from the carriageway edges to the centerline by overlapping passes of the compaction equipment. The number of passes shall be as directed by the Engineer dependent upon the equipment used and the material being compacted. Unless otherwise instructed the moisture content of the material shall be within ± 2% of optimum

Where additional moisture is required water shall be applied in an even manner and the rate of application shall be such that no transverse or longitudinal flows occur.

The Engineer may instruct the Contractor to carry out density tests on the compacted material to ensure that an acceptable standard has been achieved.

The Contractor shall use Equipment for haulage and **Labour** for spreading unless the Engineer instructs otherwise.

Work Method: LB-MB

Quality Control:

- The gravel surface width shall be checked at 100m intervals and shall have a tolerance of ±50mm
- Trial holes shall be dug as directed by the Engineer to check the gravel thickness and shall have a tolerance of + 5mm / - 0mm
- The camber shall be checked at 50m intervals and the maximum tolerance shall be ±1 %
- The longitudinal profile shall be checked after the compaction of each load to ensure a smooth surface with no corrugations or depressions, tolerance of ± 10mm.
- Compaction shall show no movement of material under the roller, minimum of 6 passes.
- Compaction test standard shall be 95% MDD (AASHTO T180)

Measurement Unit: m^3
The measurement shall be the volume of compacted gravel surfacing measured net according to the Drawings and shall include the excavation and the 1.5km 'free' haul distance

Payment. The unit rate shall be the full compensation for labour, tools, equipment and incidental costs required for carrying out the work.

BILL 17: Concrete Works

17-50-013: Provide, place and compact class 25/20 concrete

17-60-005: Provide, cut, bend and fix into position high yield reinforcement bar to BS 44461 as directed and as shown on the drawing

These activities should be done in accordance with Bill 17 sub section 17.01 to 17.41 of the Standard Specifications for Roads and Bridges 1986.

20-50-010: Guard Rail Installation

The Contractor shall erect guardrails at locations shown on the Drawings or as directed by the Engineer. The guardrails shall comply with the requirements of the Road Authority and shall be erected on hard wood or treated timber posts of top diameter not less than 150mm.

Posts shall be drilled and shaped as shown on the Drawings and provided with the necessary bolts, nuts, washers and spacer blocks.

Holes excavated for the timber posts shall be spaced to suit the standard length of guardrail supplied, and shall be of sufficient size to permit the proper setting of the posts and to allow room for backfilling and compacting. At least 1 metre of a post shall be embedded in the ground. The backfilling shall be with 12:1 soil cement mixture, or as otherwise directed by the Engineer, after the erected rails have been approved by the Engineer.

The Contractor shall use **Labour** to carry out this item.

Work Method LB

Quality Control

The Engineer shall check the post and rail erection before final backfilling.

Measurement Unit: m

The measurement shall be the length of Guardrail erected.

Payment

The unit rate shall be the full compensation for labour, tools, materials and incidental costs required for carrying out the work.

BILL 22: DAYWORKS

ITEMS 22-50-001 to 22-79-018 are for the Schedule of Rates. The Engineer will include the relevant items for each specific contract document.

A Provisional Sum shall be included in the Bills of Quantities to cover the payment of equipment, labour and materials for work instructed by the Engineer on a Dayworks basis.

The Contractor shall include prices for all items in the Schedule of Rates, in the Dayworks Bill, and shall carry out work using these rates only if directed by the Engineer.

Measurement and Payment

a. Equipment:

Payment for equipment shall only be made for the time each item of equipment is working. Idle time due to breakdown or incompleteness of the equipment shall not be paid. The rate of equipment shall include for the cost of the following: -

i. Transport of the equipment to the site
ii. Operators, drivers and assistants including their overtime
iii. Fuels and lubricants
iv. Maintenance, spare parts and all costs of repairs
v. Depreciation, insurance, overheads and profits.

b. Labour

Payment shall only be made for the time each of worker working on the Dayworks as instructed by the Engineer. The rate for labour shall include the cost of,

i. All wages, allowances and other payments due to the worker
ii. Provision of small tools used on Dayworks activities by labourers and tradesmen.
iii. Insurance, overheads and profit.

c. Materials

Payment shall only be made for materials instructed by the Engineer for use in Dayworks activities. The rate for materials shall include for the cost of provision of the material, transport to site, storage, handling, overheads and profits.

Schedule of Dayworks

The Engineer shall compile a Schedule of the Equipment, Labour and Materials which may apply to Dayworks activities, to be included in the Dayworks Bill.

CONTENTS:

CONRACT DRAWINGS

FIGURE C.1 - CROSS SECTION A (MINOR STANDARD CROSS-SECTION) C-1
FIGURE C.2 - CROSS SECTION B (REDUCED CROSS-SECTION) C-2
FIGURE C.7 - CULVERT ENTRY / EXIT STRUCTURE TYPES C-7
FIGURE C.8 - HEADWALL TYPE 1 (HEAD AND WINGWALLS) C-8
FIGURE C.9 - HEADWALL TYPE 2 (DROP INLET) C-9
FIGURE C.10 - HEADWALL TYPE 3A (CONCRETE BLOCK HEADWALLS) C-10
FIGURE C.13 - BEDDING AND HAUNCH PROFILES TYPES I & II C-13
FIGURE C.14 - BEDDING AND HAUNCH PROFILES TYPES III & IV C-14
FIGURE C.16 - TRAFFIC SIGNS C-16
FIGURE C.17 - BILLBOARD C-17

PREAMBLE TO BILLS OF QUANTITIES C-18

BILL OF QUANTITIES

FIGURE C.1 - CROSS SECTION A (MINOR STANDARD CROSS-SECTION)

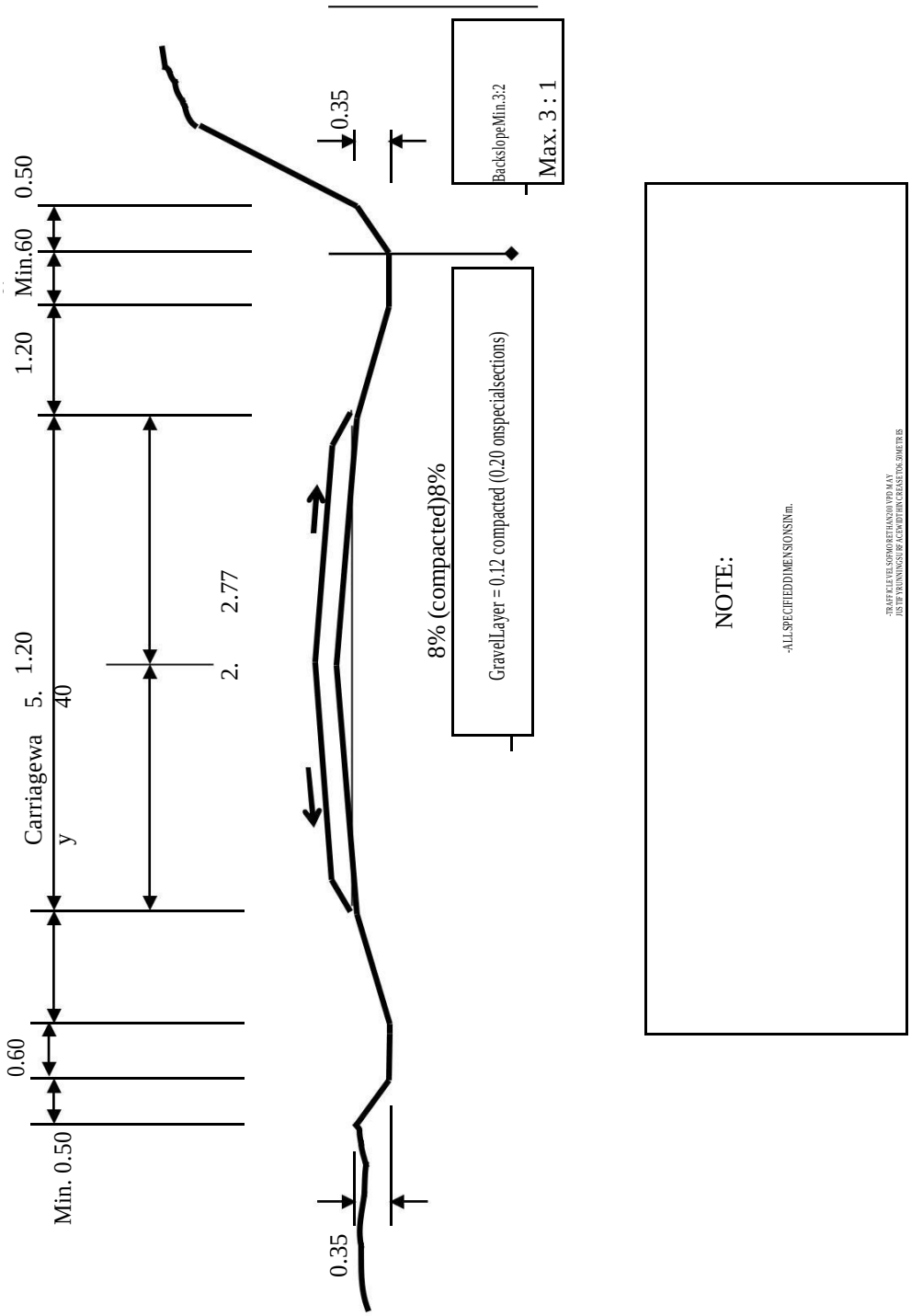

FIGURE C.3 - MITRE DRAINS

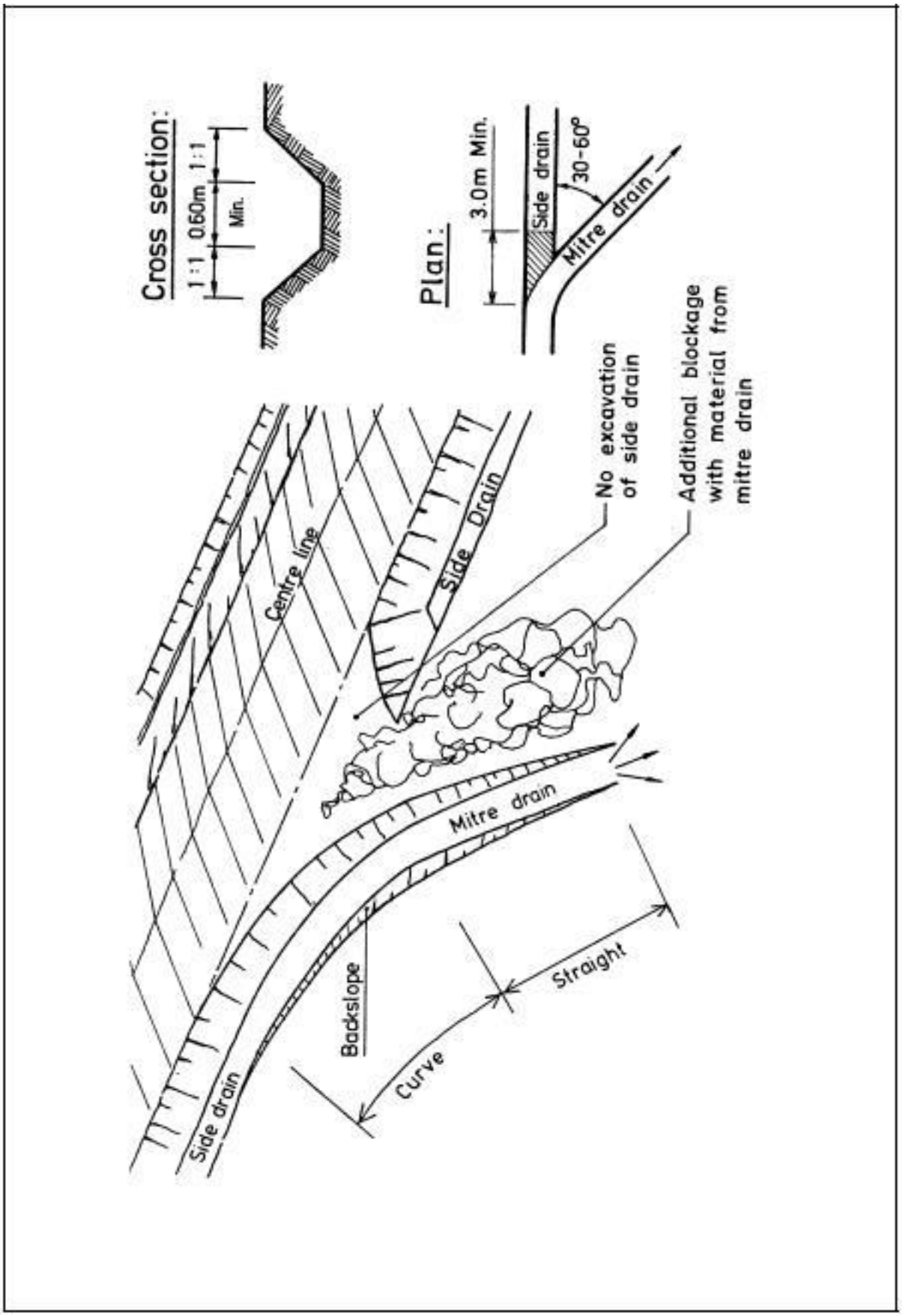

FIGURE C.7 - CULVERT ENTRY / EXIT STRUCTURE TYPES

TYPE 1 (ENTRY AND EXIT)

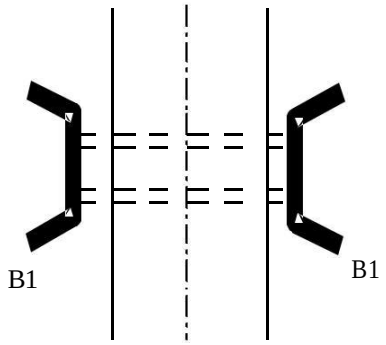

TYPE 3 (ENTRY AND EXIT)

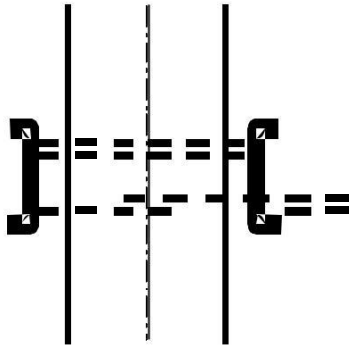

TYPE 2 (ENTRY ONLY!)

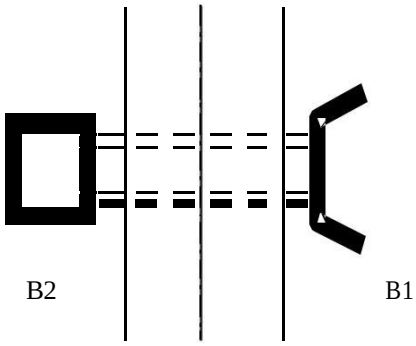

TYPE 4 (ENTRY AND EXIT ON ACCESS)

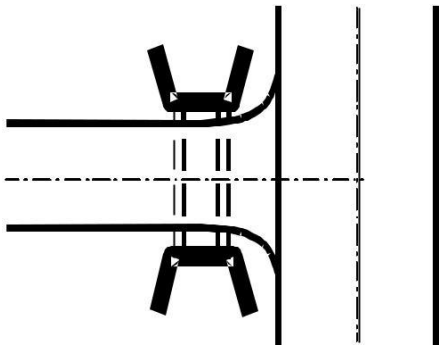

NOTE:

Coding system has been used in describing the standardised designs of the various culvert entry and exit structures. The code names consist of a number to specify shape and function as elaborated in above while the used construction materials are identified through an alphabetic symbol as follows:

A =Concrete block
B =Stone masonry
C =Dressed stones

An example code of "B2" would therefore stand for a drop inlet type structure to be built in stone masonry.

HEADWALL-WINGWALLS)

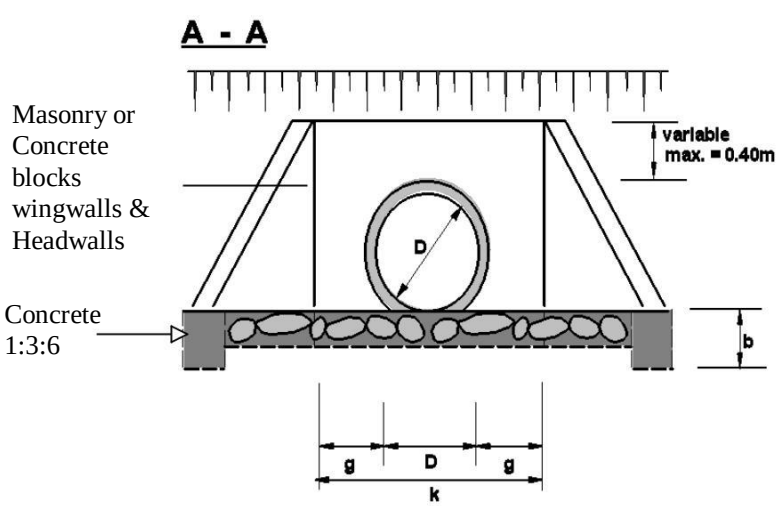

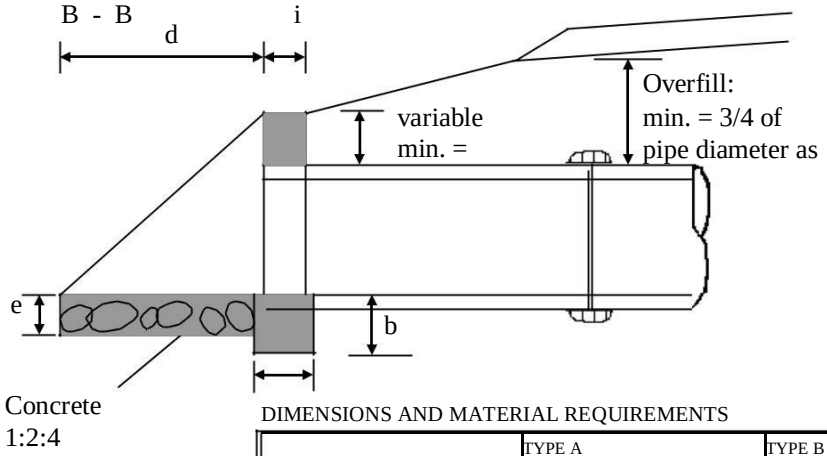

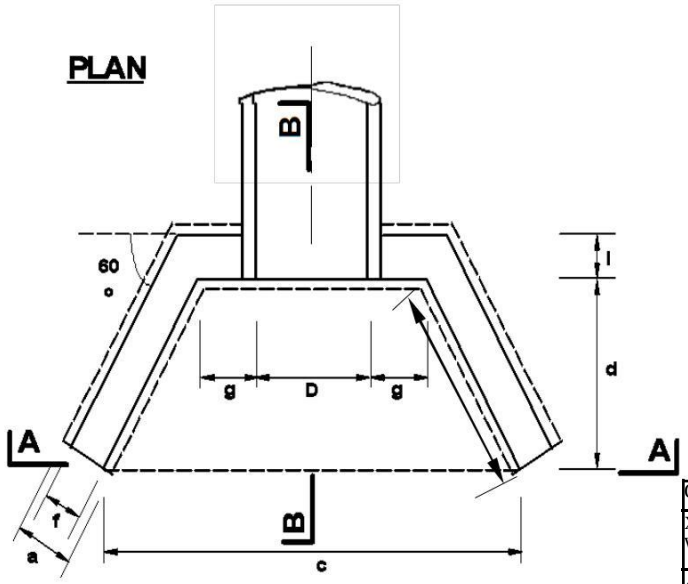

DIMENSIONS AND MATERIAL REQUIREMENTS

PIPE DIAMETER IN (M)			TYPE A (CONCRETE BLOCKS			TYPE B (STONE MASONRY)		
			450	600	900	450	600	900
DIMENSION		UNIT						
a	FOUNDATION	m	0.30	0.30	0.30	0.40	0.40	0.60
b	FOUNDATION	m	0.30	0.30	0.40	0.30	0.30	0.40
c	FOUNDATION		2.20	2.35	2.89	2.20	2.35	2.89
d	APRON	m	1.00	1.00	1.20	1.00	1.00	1.20
e	APRON	m	0.20	0.20	0.20	0.20	0.20	0.20
f	WALL	m	0.20	0.20	0.20	0.40	0.40	0.40
g	WALL	m	0.30	0.30	0.30	0.30	0.30	0.30
h	WALL	m	1.15	1.15	1.39	1.15	1.15	1.39
I	WALL	m	0.20	0.20	0.20	0.40	0.40	0.40
k	APRON	m	1.05	1.20	1.50	1.05	1.20	1.50
MATERIAL REQUIREMENT								
FOUNDATION (Concrete)		m^3	0.3	0.32	0.51	0.4	0.42	1.03
HEAD/WINGWALLS (Concrete/Masonry)		m^3	0.4	0.47	0.67	0.8	0.93	1.35
APRON (Concrete)		m^3	0.33	0.36	0.53	0.33	0.36	0.53

CULVERT PIPES	
X-SECTION WIDTH	No. of Pipes
4.50	6.00
5.50	7.00
6.50	8.00

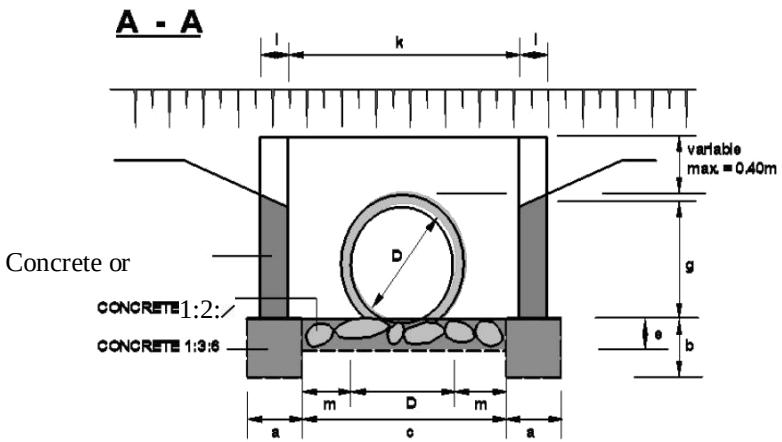

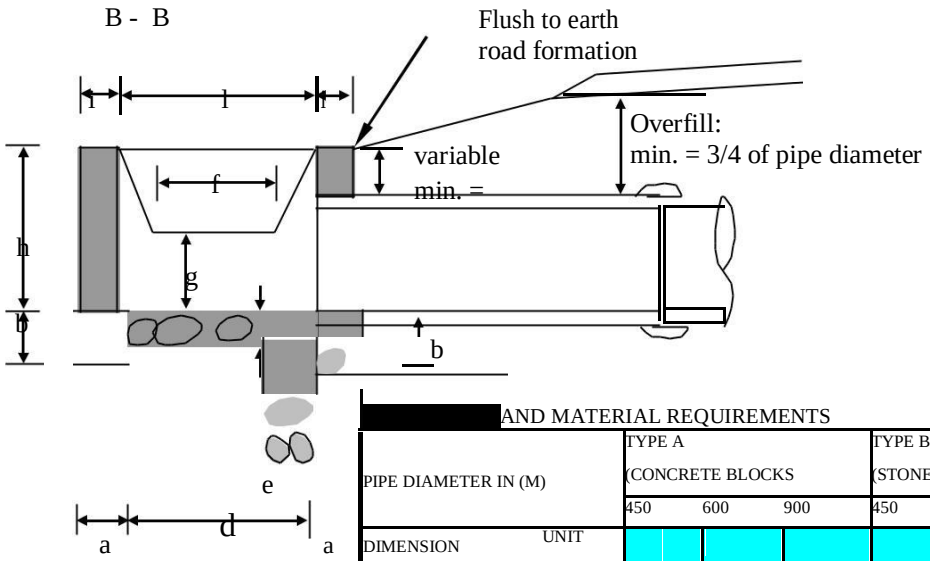

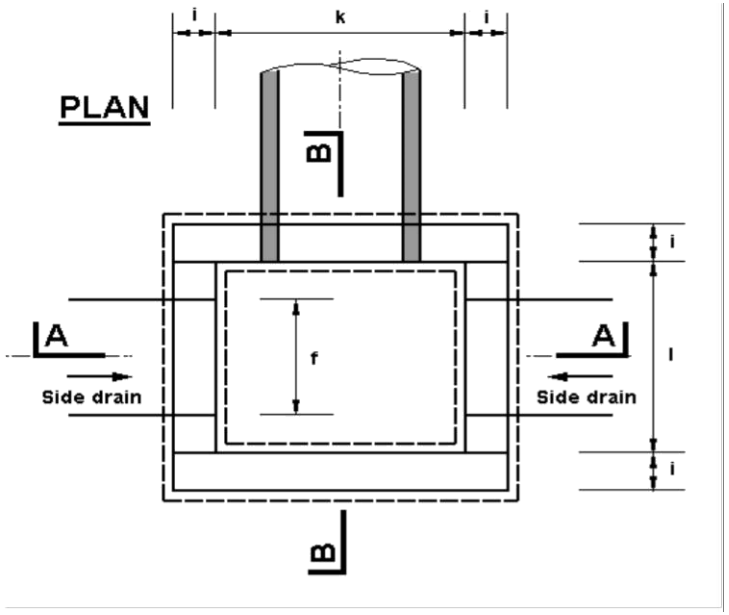

[redacted] AND MATERIAL REQUIREMENTS

PIPE DIAMETER IN (M)			TYPE A (CONCRETE BLOCKS			TYPE B (STONE MASONRY)		
			450	600	900	450	600	900
DIMENSION		UNIT						
a	FOUNDATION	m	0.30	0.30	0.30	0.40	0.40	0.40
b	FOUNDATION	m	0.30	0.30	0.30	0.30	0.30	0.30
c	FOUNDATION	m	1.10	1.10	1.40	1.20	1.20	1.50
d	APRON	m	0.90	0.90	0.90	1.00	1.00	1.00
e	APRON	m	0.20	0.20	0.20	0.20	0.20	0.20
f	DROP INLET	m	0.60	0.60	0.60	0.60	0.60	0.60
g	DROP INLET	m	0.30	0.40	0.60	0.30	0.40	0.60
h	DROP INLET	m	0.60	0.80	1.20	0.60	0.80	1.20
I	DROP INLET	m	0.20	0.20	0.20	0.40	0.40	0.40
k	DROP INLET	m	1.20	1.20	1.50	1.20	1.20	1.50
l	DROP INLET	m	1.00	1.00	1.00	1.00	1.00	1.00
m	DROP INLET	m	0.38	0.30	0.30	0.38	0.30	0.30
MATERIAL REQUIREMENT								
FOUNDATION								
(Concrete)		m^3	0.47	0.47	0.52	0.72	0.72	0.79
HEAD/WINGWALLS								
(Concrete/Masonry)		m^3	0.53	0.69	1.11	1.24	1.63	2.61
APRON								
(Concrete)		m^3	0.24	0.24	0.30	0.24	0.24	0.30

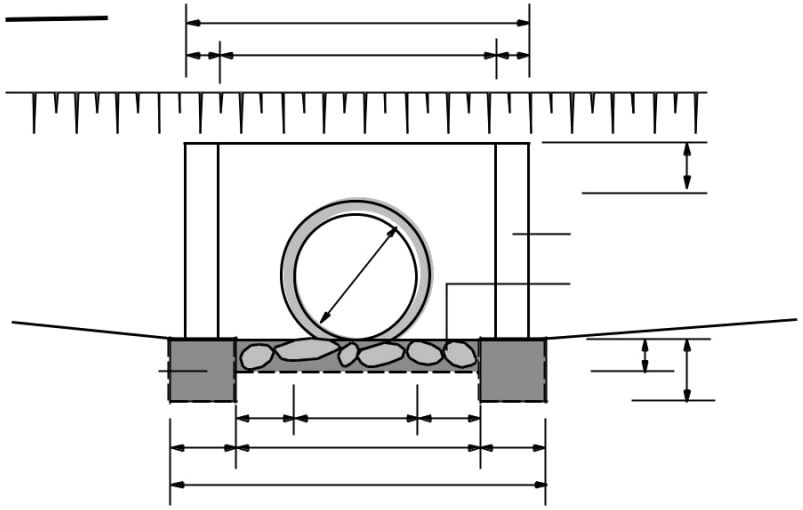

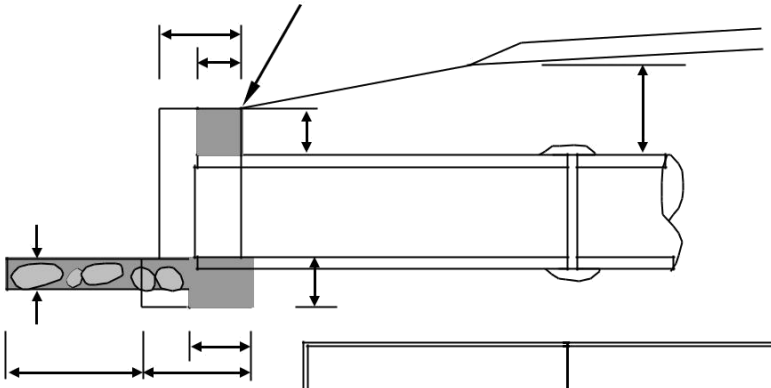

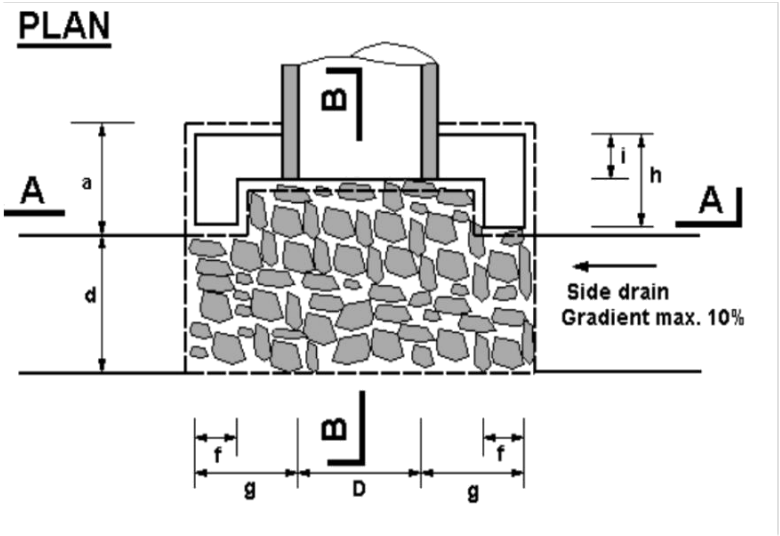
PLAN
B
A
a
i
h
A
d
Side drain
Gradient max. 10%
B
f
f
g
D
g

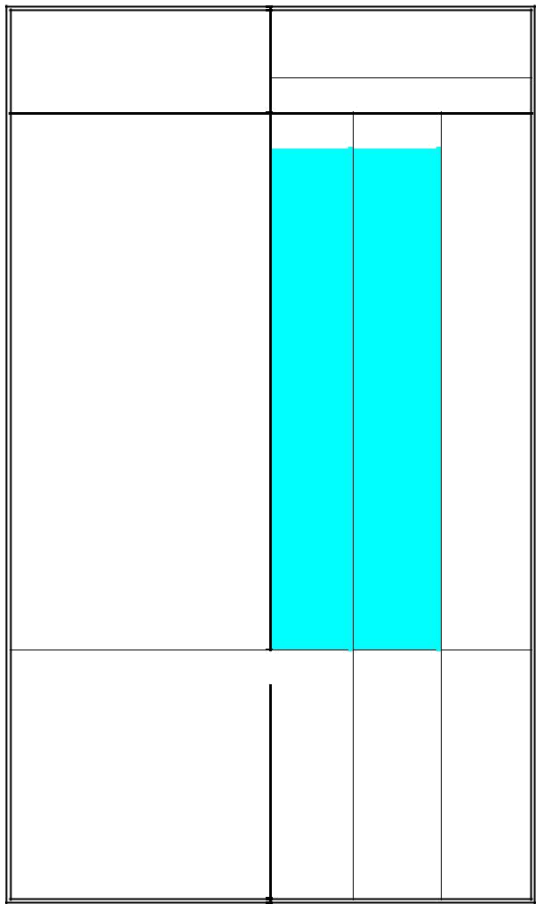

CULVERTS)ACCESSFOR(4TYPEHEADWALL-12.CFIGURE

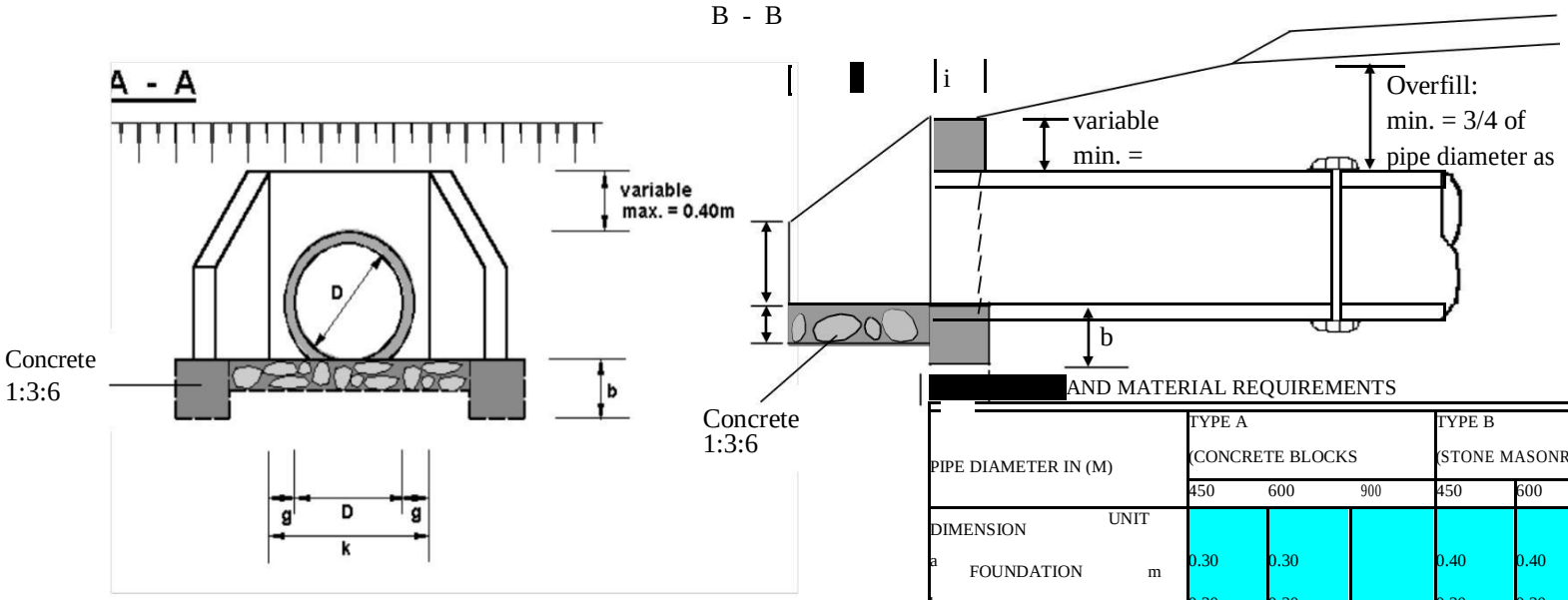

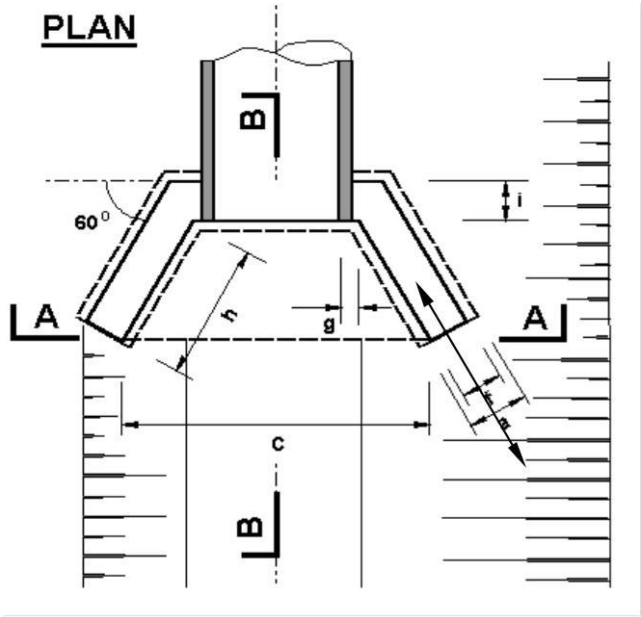

[redacted] AND MATERIAL REQUIREMENTS

PIPE DIAMETER IN (M)			TYPE A (CONCRETE BLOCKS			TYPE B (STONE MASONRY)		
			450	600	900	450	600	900
DIMENSION		UNIT						
a	FOUNDATION	m	0.30	0.30		0.40	0.40	
b	FOUNDATION	m	0.30	0.30		0.30	0.30	
c	APRON		1.34	1.49		1.34	1.49	
d	APRON	m	0.60	0.60		0.60	0.60	
e	APRON	m	0.20	0.20		0.20	0.20	
f	WINGWALLS	m	0.20	0.20		0.40	0.40	
g	WINGWALLS	m	0.10	0.10		0.10	0.10	
h	HEADWALLS	m	0.69	0.69		0.69	0.69	
I	HEADWALLS	m	0.20	0.20		0.40	0.40	
k	HEADWALLS	m	0.65	0.80		0.65	0.80	
I	HEADWALLS	m	0.40	0.40		0.40	0.40	
MATERIAL REQUIREMENT								
FOUNDATION								
(Concrete 1:2:4, 1:3:6)		m^3	0.18	0.2		0.24	0.26	
HEAD/WINGWALLS								
(Concrete/Masonry)		m^3	0.25	0.29		0.50	0.58	
APRON								
(Concrete)		m^3	0.12	0.14		0.12	0.14	

FIGURE C.13- BEDDING AND HAUNCH PROFILES TYPES I & II

PROFILE I

(CONCRETE)

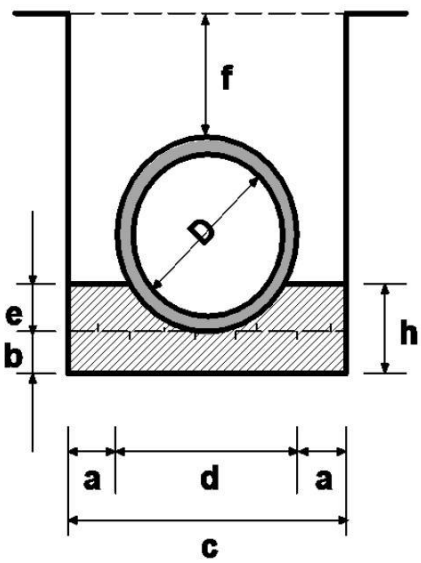

PROFILE II

(CONCRETE)

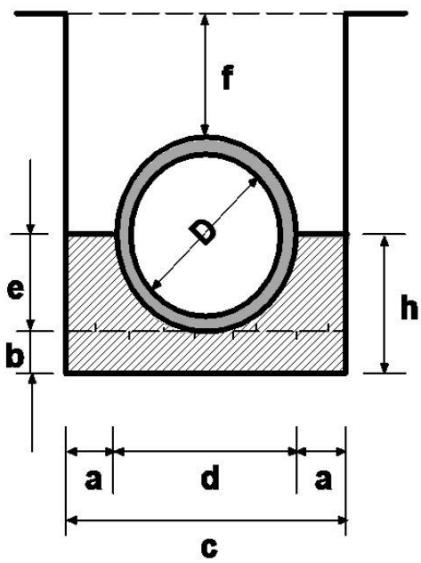

Diameter (D)	450 (mm)	600 (mm)	900 (mm)
	Dimensions in (m)		
a	0.15	0.2	0.2
b	0.1	0.15	0.15
c	0.86	1.12	1.48
d	0.56	0.72	1.08
e	0.14	0.18	0.27
f (min.)	0.34	0.45	0.68
g	-	-	-
h	0.24	0.33	0.42
i	-	-	-
Concrete	Volume in (m3/m)		
	0.16	0.3	0.48
Application	- Fair subgrade condition; - Overfill > ¾ Diameter; - Seasonal waterflow only.		
Remarks	- Use gravel material for back/ overfill.		

450 (mm)	600 (mm)	900 (mm)
Dimensions in (m)		
0.15	0.2	0.2
0.1	0.15	0.15
0.86	1.12	1.48
0.56	0.72	1.08
0.28	0.36	0.54
0.34	0.45	0.68
-	-	-
0.38	0.51	0.69
-	-	-
Volume in (m3/m)		
0.2	0.37	0.56
- Fair to poor subgrade Condition; - Overfill > ¾ Diameter; - Seasonal waterflow only.		
- Use gravel material for back/ overfill.		

FIGURE C.14 - BEDDING AND HAUNCH PROFILES TYPES III & IV

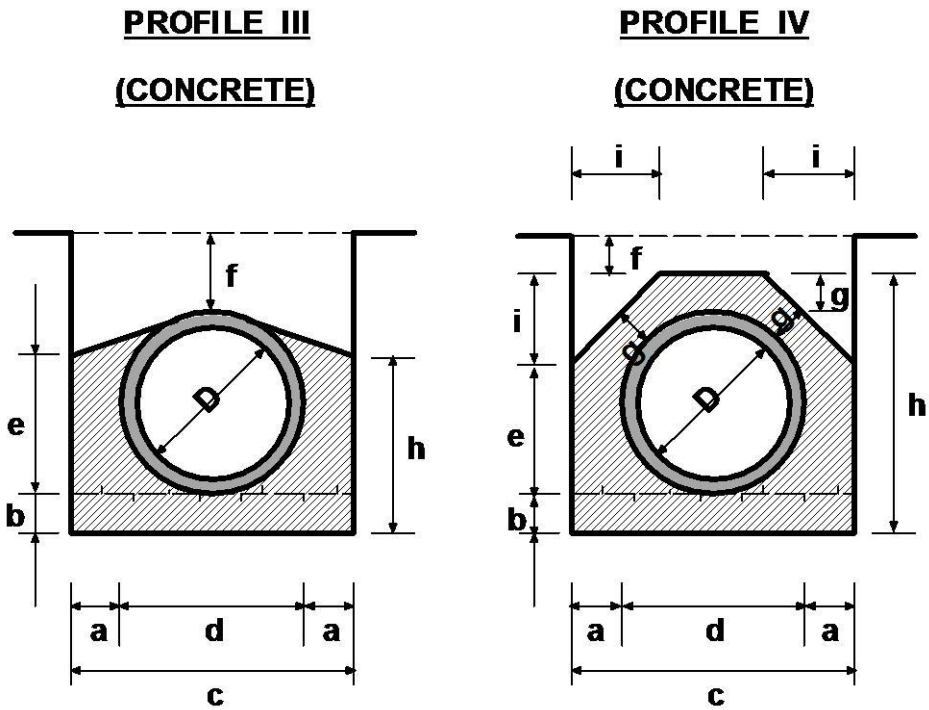

Diameter (D)	450 (mm)	600 (mm)	900 (mm)
	Dimensions in (m)		
a	0.15	0.2	0.2
b	0.1	0.15	0.15
c	0.86	1.12	1.48
d	0.56	0.72	1.08
e	0.42	0.54	0.81
f (min.)	0.23	0.3	0.45
g	-	-	-
h	0.52	0.69	0.96
i	-	-	-
Concrete	Volume in (m3/m)		
	0.26	0.47	0.71
Application	- Fair subgrade condition; - Overfill > ¾ Diameter; - Seasonal waterflow only.		
Remarks	- Use gravel material for back/ overfill.		

450 (mm)	600 (mm)	900 (mm)
Dimensions in (m)		
0.15	0.2	0.2
0.1	0.15	0.15
0.86	1.12	1.48
0.56	0.72	1.08
0.46	0.52	0.78
0.15	0.15	0.15
0.15	0.15	0.15
0.81	1.02	1.38
0.28	0.35	0.45
Volume in (m3/m)		
0.37	0.61	0.92
- Fair to poor subgrade Condition; - Overfill > ¾ Diameter; - Seasonal waterflow only.		
- Use gravel material for back/ overfill.		

FIGURE C.16 - TRAFFIC SIGNS

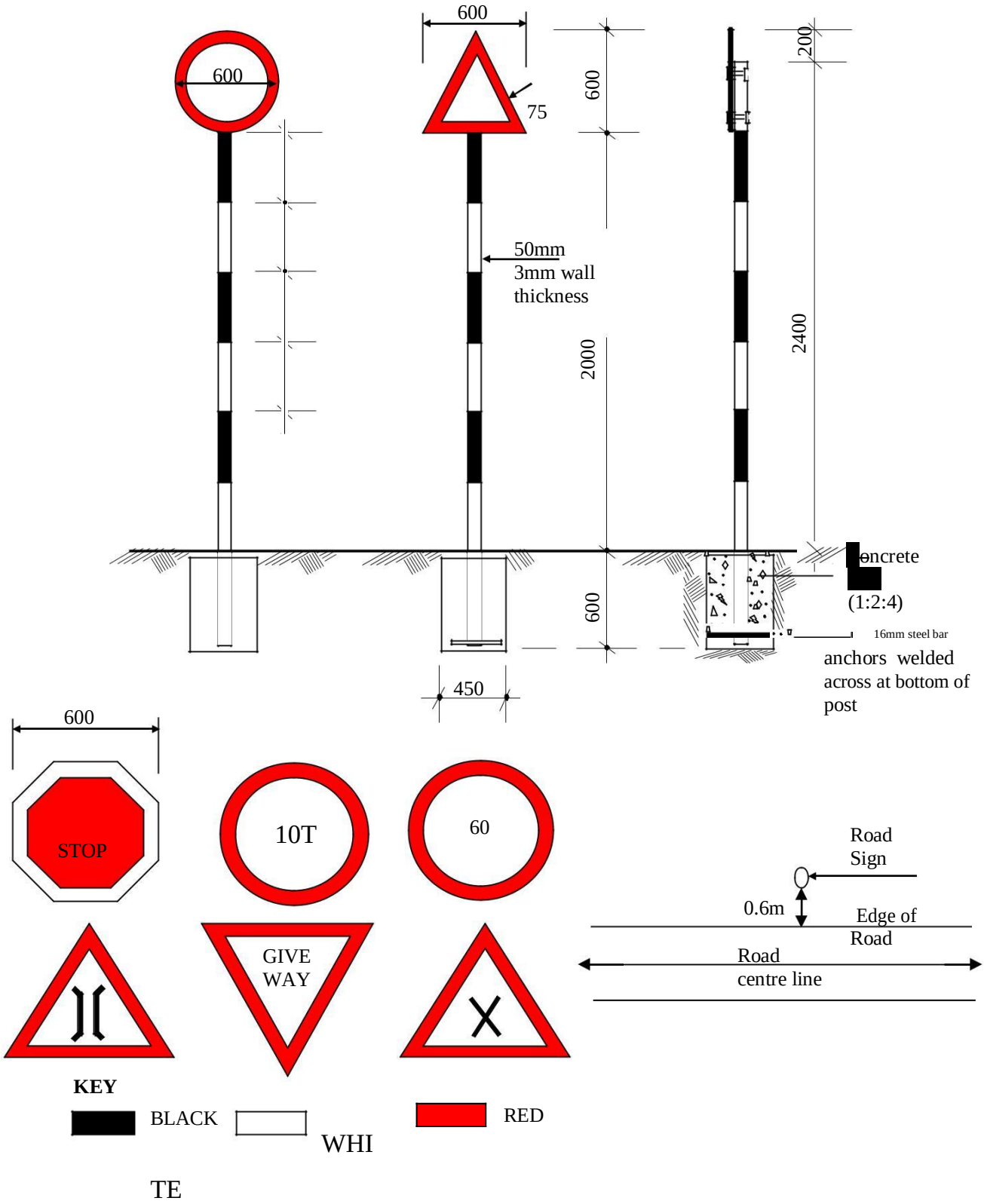

1. The type of sign required and their location shall be as shown on the improvement plan and as directed by the Engineer
2. Sign plate to be 2 mm thick mild steel plate
3. Sign post to be 50 mm internal diameter steel pipe with wall thickness of 3 mm.
4. Sign plate to fixed to steel tube by 4 Nos M10 bolts and 2 Nos 50 mm f fixing clamps/brackets.
5. Sign paints shall be reflective.
6. The sign plate and post shall be treated by applying two coats of lead red oxide paint before applying priming and two finish coats of approved paints . Paints used shall have a hard, durable and glossy finish.

FIGURE C.17 - PUBLICITY SIGNBOARD

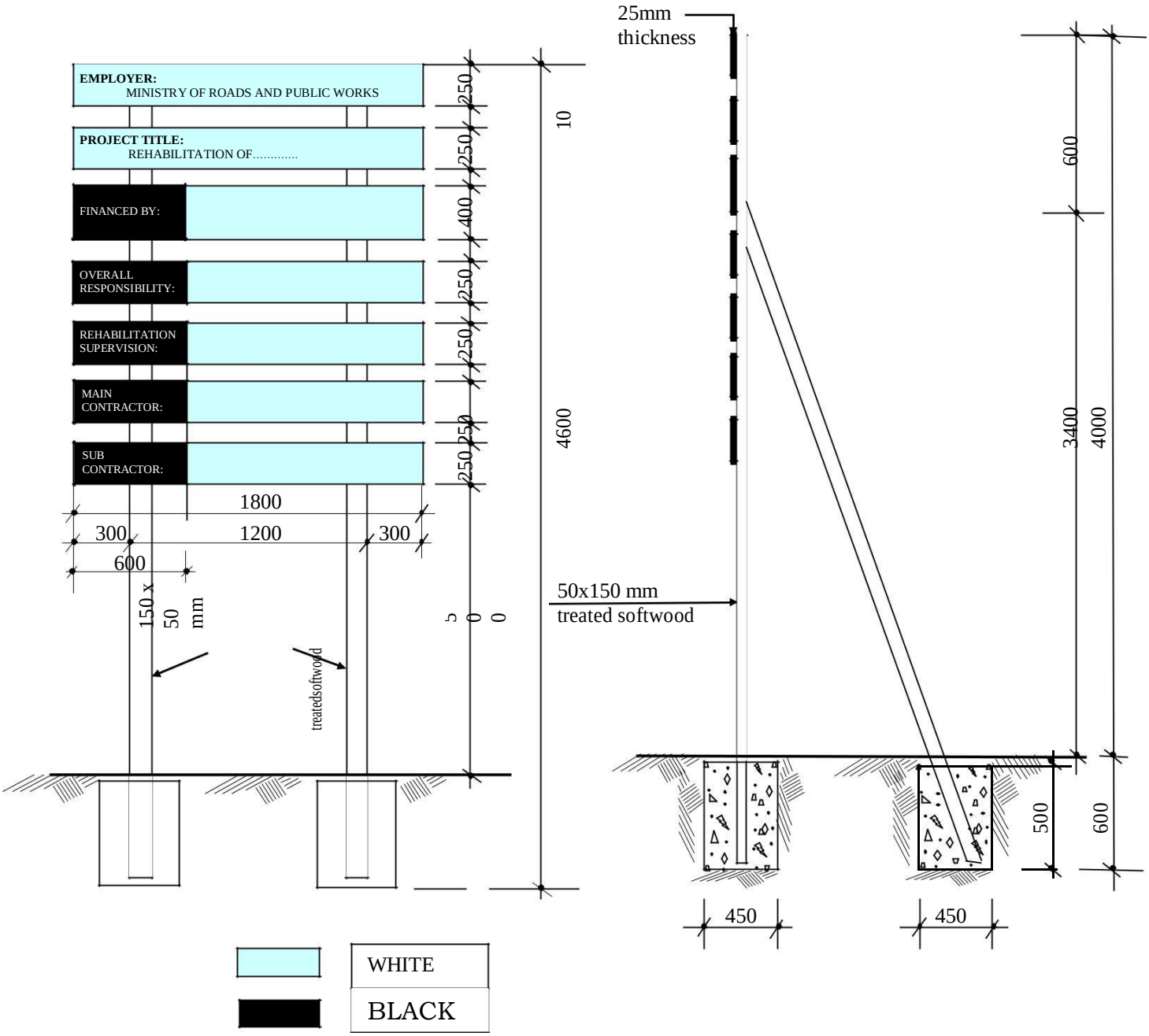

NOTES

1. The wording of the project signboard and the location to be installed to be as directed by the Engineer
2. Materials to be used for fabrication of signboard shall be pressure impregnated treated softwood timber sizes as indicated in the drawing
3. Wording boards to be nailed to the posts using nails.
4. Project board posts and struts to be embedded in concrete ratio 1:2:4

13 STANDARD FORMS

FORM OF TENDER

_____ *2019 [Date]*

TO: The Director General, Kenya Rural Roads Authority

Dear Sir,

1. In accordance with the Conditions of Contract, Specifications, Drawings and Bills of Quantities/ for the execution of the above Works, **We,** the undersigned offer to construct, install and complete such Works and remedy any defects therein for the sum of Kshs._____*[Amount in figures]*

   _____

   _____ _____ *[Amount in words]*

2. We undertake, if our Tender is accepted, to commence the Works on the commencement date and to complete the whole of the Works comprised in the Contract within the time stated in the Appendix.

3. We agree to abide by this Tender until _____*[Insert date]*, and it shall remain binding upon us and may be accepted at any time before that date.

4. Unless and until a formal Agreement is prepared and executed this Tender together with your written acceptance thereof, shall constitute a binding Contract between us.

5. We understand that you are not bound to accept the lowest or any Tender you may

   receive. Dated this _____ day of _____20_____

   Signature _____in the capacity of_____

   duly authorized to sign Tenders for and on behalf of

   _____ *[Name of Tenderer*] of

   _____ [*Address of Tenderer]*

   Witness: Name_____

   Address_____

   Signature_____

   Date_____

QUALIFICATION INFORMATION

TENDER QUESTIONNAIRE

Please fill in block letters.

1. Full name of Tenderer;

   ……

2. Full address of Tenderer to which Tender correspondence is to be sent (unless an agent has been appointed below);

   ……

3. Telephone number (s) of Tenderer;

   ……

4. Facsimile of Tenderer;
   ……

5. Name of Tenderer's representative to be contacted on matters of the Tender during the Tender period;
   ……

6. Details of Tenderer's nominated agent (if any) to receive Tender notices (name, address, telephone, telefax);

   ……

   ……

_____
Signature of Tenderer

CONFIDENTIAL BUSINESS QUESTIONNAIRE

You are requested to give the particulars indicated in Part 1 and either Part 2 (a) or 2 (b) whichever applies to your type of business.

You are advised that it is a serious offence to give false information on this Form.

Part 1 – General

Business Name ……

Location of business premises; Country/Town…….

Plot No…… Street/Road ……

Postal Address…… Tel No……..

Nature of Business……..

Current Trade Licensee No…… Expiring date……

Maximum value of business which you can handle at any time: Kshs ……..

Name of your Bankers……

Branch……

Part 2 (a) – Sole Proprietor

Your name in full…… Age……

Nationality…… Country of Origin……

Citizenship details ……

Part 2 (b) – Partnership

Give details of partners as follows:

	Name in full	*Nationality*	*Citizenship Details*	*Shares*
1	……			
2	……			
3	……			

Part 2 (c) – Limited Company Give details of directors as follows:

	Name in full	*Nationality*	*Citizenship Details*	*Shares*
1	……			
2	……			
3	……..			
4	……			

ENVIRONMENTAL AND SOCIAL COMMITMENT

I have taken due note of the importance to comply with environmental and social standards and regulations.

I, the undersigned, ……. acting as the duly authorized representative of ……..,

With respect to the submission of a bid for ……..] in accordance with the invitation to tender No …….., I undertake to comply, and ensure that our subcontractors, if any, comply with international environmental and labour standards consistent with applicable law and regulations in the country of implementation of the Project, including the fundamental conventions of the International Labour Organisation (ILO) and international environmental treaties

In addition, I also undertake to adopt any environmental and social risk mitigation measures as defined in the environmental and social management plan or the notice of environmental and social impact issued by the Employer.

Dated this _____ day of _____20_____

Signature _____in the capacity of_____

duly authorized to sign Tenders for and on behalf of

_____[Name of Tenderer] of

_____[Address of Tenderer]

_____[Seal or Stamp of Tenderer]

FORM OF WRITTEN POWER-OF-ATTORNEY

The Tenderer shall state here below the name(s) and address of his representative(s) who is/are authorized to receive on his behalf correspondence in connection with the Tender.

…….
(Name of Tenderer in block letters)

…….
(Name of Tenderer's Representative in block letters)

……..
((Address of Tenderer's Representative)

…….
(Address of Alternate Tenderer's Representative, if any)

…….
(Signature of Tenderer's Representative)

FRAUD & CORRUPTION

1 If the Employer determines that the Contractor has engaged in corrupt, fraudulent, collusive, coercive or obstructive practices, in competing for or in executing the Contract, then the Employer may, after giving 14 days notice to the Contractor, terminate the Contractor's employment under the Contract and expel him from the Site.

2 Should any employee of the Contractor be determined to have engaged in corrupt, fraudulent, collusive, coercive, or obstructive practice during the execution of the Works, then that employee shall be removed.

3 For the purposes of this Sub-Clause:

(i) "corrupt practice" is the offering, giving, receiving or soliciting, directly or indirectly, of anything of value to influence improperly the actions of another party;

(ii) "fraudulent practice" is any act or omission, including a misrepresentation, that knowingly or recklessly misleads, or attempts to mislead, a party to obtain a financial or other benefit or to avoid an obligation;

(iii) "collusive practice" is an arrangement between two or more parties designed to achieve an improper purpose, including to influence improperly the actions of another party;

(iv) "Coercive practice" is impairing or harming, or threatening to impair or harm, directly or indirectly, any party or the property of the party to influence improperly the actions of a party

(v) Will declare a firm ineligible, either indefinitely or for a stated period of time, to be awarded a government contract if it at any times determines that the firm has engaged in corrupt or fraudulent practices in competing for, or in executing, a Government financed contract.

4 The Contractor declares that:

a) They did not engage in any action to influence the Project implementation process to the detriment of the Employer, in particular no collusive practice took place nor will take place, and

The bidding proceedings, contract award, and execution have not and will not be subject to any corrupt practice as defined in the United Nations Convention to combat corruption dated 31 October 2003.

Dated this _____ day of _____20_____

Signature _____in the capacity of_____

duly authorized to sign Tenders for and on behalf of
_____[Name of Tenderer] of

_____[Address of Tenderer]

_____[Seal or Stamp of Tenderer]

ANTI-CORRUPTION DECLARATION COMITMENT/
PLEDGE *(PPADA 2015 clause 62)*

I/We/Messrs…….

of Street, Building, P O Box……

……..

Contact/Phone/E mail……..

Declare that Public Procurement is based on a free and fair competitive Tendering process which should not be open to abuse.

I/We..……..

Declare that I/We will not offer or facilitate, directly or indirectly, any inducement or reward to any public officer, their relations or business associates, in connection with

Tender No ……..…….

for or in the subsequent performance of the contract if I/We am/are successful.

Authorized Signature.....

Name and Title of Signatory……

CONFLICT OF INTEREST DECLARATION FORM

We M/s……. (The Bidder's Company Full Name) participating in the tender for **Routine Maintenance & Spot Improvement** of …… **Tender NO. KeRRA ……**in line with clause 3.8 of Instruction to Tenderers of this document hereby declare that we have no Conflict of Interest whatsoever in this proceeding: -

Authorized Signature.....

Name and Title of Signatory……

FORM OF AGREEMENT

THIS AGREEMENT *is made on the …… day of ……. 20 …… between the The Director General, Kenya Rural Roads Authority of P. O. Box 48151-00100, Nairobi, Kenya hereinafter called "the Employer" of the one part and …….. hereinafter called "the Contractor" of the other part.*

WHEREAS *the Employer is desirous that certain works should be executed, viz.*

Routine Maintenance & Spot Improvement of …….....

…….. ROAD

CONTRACT NO. KeRRA

and has accepted a Bid by the Contractor for the execution completion and maintenance of such works,

NOW THIS AGREEMENT WITNESSETH *as follows:*

1. In this agreement words and expressions shall have the same meanings as are respectively assigned to them in the Conditions of Contract hereinafter referred to.

2. The following document shall be deemed to form and be read and construed as part of this Agreement, viz.:

a). The Letter of acceptance

b). The said BID and Appendix to Tender

c). The Conditions of Contract Part II

d). The Conditions of Contract Part I

e). The Special Specifications

f). The Standard Specifications for Road and Bridge Construction, 1986 Edition.

g). The Drawings

h). Schedules of Supplementary Information

g). The Priced Bill of Quantities

i). Other documents as may be agreed and listed

All aforesaid documents are hereinafter referred to as "The Contract".

3. In consideration of the payment to be made by the Employer to the Contractor, the Contractor hereby covenants with the Employer to execute,

complete and maintainthe works in conformity in all respects with the provisions of the Contract.

The Employer hereby covenants to pay the Contractor in consideration of the execution, completion and maintenance of the works the Contract Price at the times and in the manner prescribed by the Contract.

IN WITNESS WHEREOF *the parties hereto have caused their respective common seals to be hereto affixed (or have hereunto set their respective hands and seals) on the day and year first above written.*

SIGNED SEALED AND DELIVERED

By the said Employer: ……..
(Director General, Kenya Rural Roads Authority)
For and on behalf of the said Employer

In the presence of: ……..
(Name and Designation of Witness)

……..
(Signature of Witness)

……..
(Address of witness)

By the said Contractor: ……..…….…….…….

In the presence of: ……..
(Name and Designation of Witness)

……..
(Signature of Witness)

……..
(Address of witness)

CERTIFICATE OF BIDDER 'S VISIT TO SITE
This is to certify that

[Name/s] …….

……..

Being authorized representative/Agent of [Name of bidder]

…….

…….

Participated in the organised inspection visit of the site of the works for the

PROCUREMENT OF ROADWORKS ON the **NGUMBA ROAD 1 km 0+000 to km 1+200 distance of 1.2kms**

…… day of …… 20 ……...

Signed ……
(Employer's Representative)

……...

…….. *……*
(Name of Employer's Representative) *(Designation)*

NOTE: This form is to be completed at the time of the organized site visit.

ANNEX 1 THE WORKS

The works are located on the **NGUMBA ROAD 1 km 0+000 to km 1+200 distance of 1.2kms**

The Contractor shall in carrying out the maintenance Works undertake the specific tasks set out by the Engineer in this Annex. The Work shall be carried out in accordance with the Specifications and drawings which are available at the Regional Office and form part of the Contract.

The works to be executed under the contract comprise mainly of but are not limited to the following:

- General: Office administration and overheads/Preliminaries
- SITE CLEARANCE
- EARTHWORKS
- CULVERT AND DRAINAGE WORKS
- GRADING AND GRAVELLING WORKS
- DAYWORKS.

14 PREAMBLES TO BILLS OF QUANTITIES

1. The Bills of Quantities forms part of the Contract Documents and are to be read in conjunction with the instructions to Tenderers and these documents. Bidders should initial each page of the bill of quantities page.

2. The prices and rates to be inserted in the Bill of Quantities are to be the full, inclusive value of the work described under the several items including all costs and expenses which may be required in and for the execution of the work described and for the Contractor's overheads and profits and shall be within the prescribed limits. The item rates shall be compared to the engineer's rates and checked for reasonableness unacceptable deviations shall be disqualified.

3. Each item in the B/Q contains only a brief description of the proposed work. Fuller details and directions of the work to be done, the materials to be used, the standards of workmanship, methods of measurement and payment are to be found in the various sections of the Specifications.

4. The Quantities set forth in the Bill of Quantities are estimated and representing substantially the work to be carried out. There is no guarantee to the Contractor that he will be required to carry out all the quantities of work indicated under any one particular item or group of items in the Bills of Quantities.
   The basis of payment shall be the Contractor's rates and the quantities of work actually done in fulfilment of his obligation under the Contract.

5. Dayworks items shall be expended in whole or in part at the discretion of the Employer.

6. The prices and rates inserted in the Bills of Quantities will be used for valuing the work executed, and the Engineer will only measure the whole of the works executed in accordance with this Contract.

Road Code UNC125 Section Name

Package: KeRRA/015/NRB/011/39/11/2019-2020

Contractor 0

Bill of Quantities

Bill No.1	**General: Office administration and overheads/Preliminaries**				**Project:**	
Item No.	**Description**	**Units**	**Quantity**	**Unit Bid Rate(Ksh)**	**Amount KSh**	**Technology**
01-50-014	Field supervision	KS	180000	1.00	180,000.00	LB-MB
01-60-005	Publicity Sign Boards	KS	1			LB-MB
	Total Carried Forward to Summary:					

NB: The bid rates shall be exclusive of VAT. The VAT shall be added in the summary page of the Bill of Quantities

Road Code UNC125 Section Name

Package: KeRRA/015/NRB/011/39/11/2019-2020

Contractor 0

Bill of Quantities

Bill No.4	**SITE CLEARANCE**				**Project:**	
Item No.	**Description**	**Units**	**Quantity**	**Unit Bid Rate(Ksh)**	**Amount KSh**	**Technology**
04-60-009	Provide, plant and maintain approved trees in accordance with specifications or as directed by the Engineer	no.	100			LB-MB
	Total Carried Forward to Summary:					

NB: The bid rates shall be exclusive of VAT. The VAT shall be added in the summary page of the Bill of Quantities

Road Code UNC125 Section Name

Package: KeRRA/015/NRB/011/39/11/2019-2020

Contractor 0

Bill of Quantities

Bill No.5	**EARTHWORKS**				**Project:**	
Item No.	**Description**	**Units**	**Quantity**	**Unit Bid Rate(Ksh)**	**Amount KSh**	**Technology**
05-50-004	Excavation to Level & Compaction	M^3	152			LB
05-50-008	Cut to spoil in Soft	M^3	2000			LB
	Total Carried Forward to Summary:					

NB: The bid rates shall be exclusive of VAT. The VAT shall be added in the summary page of the Bill of Quantities

Road Code UNC125 Section Name

Package: KeRRA/015/NRB/011/39/11/2019-2020

Contractor 0

Bill of Quantities

Bill No.8	**CULVERT AND DRAINAGE WORKS**				**Project:**	
Item No.	**Description**	**Units**	**Quantity**	**Unit Bid Rate(Ksh)**	**Amount KSh**	**Technology**
08-60-023	Culvert Installation 450 mm with surround	MT	15			LB
08-60-025	Culvert Installation 600 mm with surround	METERS	14			LB
08-60-027	Culvert Installation 900 mm with surround	METERS	7			LB
	Total Carried Forward to Summary:					

NB: The bid rates shall be exclusive of VAT. The VAT shall be added in the summary page of the Bill of Quantities

Road Code UNC125 Section Name

Package: KeRRA/015/NRB/011/39/11/2019-2020

Contractor 0

Bill of Quantities

Bill No.10	**GRADING AND GRAVELLING WORKS**				**Project:**	
Item No.	**Description**	**Units**	**Quantity**	**Unit Bid Rate(Ksh)**	**Amount KSh**	**Technology**
10-50-002	Heavy grading with watering and compaction instructed by the Engineer	M³	6000			MB
10-60-003	Gravel Patching	M³	300			MB
	Total Carried Forward to Summary:					

NB: The bid rates shall be exclusive of VAT. The VAT shall be added in the summary page of the Bill of Quantities

Road Code UNC125 Section Name

Package: KeRRA/015/NRB/011/39/11/2019-2020

Contractor 0

Bill of Quantities

Bill No.22	**DAYWORKS**				**Project:**	
Item No.	**Description**	**Units**	**Quantity**	**Unit Bid Rate(Ksh)**	**Amount KSh**	**Technology**
22-72-023	Hardcore	M^3	1400			LB-MB
	Total Carried Forward to Summary:					

NB: The bid rates shall be exclusive of VAT. The VAT shall be added in the summary page of the Bill of Quantities

RoadCode UNC125
Structure: Section Name
Package: KeRRA/015/NRB/011/39/11/2019-2020 NGUMBA ROAD 1
Contractor **0**

Bill of Quantities

Page: 1

	Summary	**Project:**
Item No.	**Description**	**Amount (KShs)**
1	General: Office administration and overheads/Preliminaries	
4	SITE CLEARANCE	
5	EARTHWORKS	
8	CULVERT AND DRAINAGE WORKS	
10	GRADING AND GRAVELLING WORKS	
22	DAYWORKS	
	Sub Total	
	VAT @ 16 %	
	Total	
	Contingencies (@ 0 %)	
	Carried to page on the form of Tender	

NB: Bidders are encouraged to bid using reasonable rates as per the prevailing market rates. The Employer shall not be bound to award to the lowest bidder.